A STANDARD OPERATING PROCEDURES MANUAL FOR THE LOUISIANA DEPARTMENT OF NATURAL RESOURCE'S COASTAL RESTORATION DIVISION:

Methods for Data Collection, Quality Assurance/ Quality Control, Storage, and Products

Todd M. Folse and Jonathan L. West

August 5, 2005
Revised March 14, 2007 (Inclusion Addendum 1-6)

Suggested reference citation:

Folse, T. M. and J. L. West. 2005. A Standard Operating Procedures Manual for the Louisiana Department of Natural Resource's Coastal Restoration Division: Methods for Data Collection, Quality Assurance / Quality Control, Storage, and Products. Louisiana Department of Natural Resources, Baton Rouge, LA. 226 pp.

TABLE OF CONTENTS

LIST OF FIGURES vi

LIST OF TABLES vii

ACKNOWLEDGEMENTS viii

EXECUTIVE SUMMARY ix

CHAPTER 1. INTRODUCTION 1
CHAPTER 2. PRELIMINARY SITE VISIT 3
2.1. Materials / Equipment 6
2.2. Site Visit Procedures 6
2.3. Deliverables 9
CHAPTER 3. SITE CONSTRUCTION 11
3.1. Sampling Platform Materials List 12
3.2. Sampling Platform Construction 15
3.3. Rod-Surface Elevation Table 17
3.4. Warning Signage 21
3.5. Water Level Support Poles 21
3.6. Staff Gauge 30
3.7. Soil Porewater 32
3.8. Static Marsh Mat Floating System 36
3.9. Elevation 37
3.10. Deliverables 39
CHAPTER 4. SURFACE WATER 43
4.1. Instrumentation 43
4.1.1. Types of Continuous Recorder Stations 44
4.1.2. Deployment and Servicing 52
4.1.3. Data Processing 56
4.1.4. Summary Data and Graphics 63
4.1.5. Deliverables 63
4.2. Marsh Wells 63
CHAPTER 5. SALINITY 65
5.1. Salinity and Water Level Continuous Recorder 66
5.1.1. Deployment and Servicing 67
5.1.2. Data Processing 70
5.1.3. Summary Data and Graphics 70
5.1.4. Deliverables 70
5.2. Discrete Sampling 71
5.2.1. Calibration 71
5.2.2. Data Collection 72
5.2.3. Quality Assurance 73
5.2.4. Data Processing 74
5.2.5. Summary Data and Graphics 76

5.2.6. Deliverables 76
CHAPTER 6. MARSH MAT 77
6.1. Floating System 77
6.1.1. Deployment and Servicing 82
6.1.2. Data Processing 87
6.1.3. Summary Data and Graphics 92
6.1.4. Deliverables 93
6.2. Static System 93
6.2.1. Field Station Establishment 94
6.2.2. Deployment and Servicing 97
6.2.3. Data Processing 100
6.2.4. Summary Data and Graphics 104
6.2.5. Deliverables 104
CHAPTER 7. SOIL POREWATER 105
7.1. Well Installation 108
7.2. Data collection 108
7.3. Data processing 109
7.4. Summary Data and Graphics 111
7.5. Deliverables 111
CHAPTER 8. ROD SURFACE ELEVATION TABLE 113
8.1. Field Station Establishment 116
8.2. Data Collection 116
8.3. Data Processing 119
8.4. Summary Data and Graphics 122
8.5. Deliverables 122
CHAPTER 9. ACCRETION 125
9.1. Field Station Establishment 125
9.2. Data Collection 129
9.3. Data Processing 134
9.4. Summary Data and Graphics 135
9.5. Deliverables 135
CHAPTER 10. EMERGENT VEGETATION 137
10.1. Herbaceous marsh sampling 137
10.2. Forested swamp sampling 142
10.3. Data Processing 148
10.4. Summary Data and Graphics 150
10.5. Deliverables 150
CHAPTER 11. SOIL PROPERTIES 151
11.1. Field Station Establishment 151
11.2. Data Collection 154
11.3. Data Processing 160
11.4. Summary Data and Graphics 160
11.5. Deliverables 161
CHAPTER 12. ELEVATIONS 163
12.1. Continuous Water Level Recorders 164
12.2. Staff Gauge 164

12.3. RSET 165
12.4. Static Floating Marsh Elevation 165
12.5. Marsh Elevations 165
12.6. Deliverables 166
CHAPTER 13. SUBMERGED AQUATIC VEGETATION 167
13.1. Field Station Establishment 168
13.2. Data Collection 168
13.3. Data Processing 169
13.4. Summary Data and Graphics 170
13.5. Deliverables 170
CHAPTER 14. SHORELINE POSITION 171
CHAPTER 15. AERIAL PHOTOGRAPHY 175
CHAPTER 16. SATELLITE IMAGERY 177
CHAPTER 17. REFERENCES 179

APPENDIX A. Field Data Sheets and Data QA/QC Forms 182
APPENDIX B. Data Deliverables Format 205
APPENDIX C. Soil Laboratory Protocols 216

ADDENDUM 1 227
ADDENDUM 2 234
ADDENDUM 3 236
ADDENDUM 4 239
ADDENDUM 5 247
ADDENDUM 6 251

LIST OF FIGURES

Figure 1: Typical schematic of a boardwalk in an attached marsh 4
Figure 1A: Typical schematic of a boardwalk in a floating marsh 5
Figure 2: CRMS-*Wetlands* decision tree 7
Figure 3: Typical layout schematic of the constructed site features at an attached marsh 13
Figure 4: Typical layout schematic of the constructed site features in a floating marsh 14
Figure 5: Tooth construction diagram 16
Figure 6: Detail construction drawing of a typical RSET station 20
Figure 7: Typical warning sign 21
Figure 8: Typical wooden post continuous recorder station 23
Figure 9: Typical construction diagram of a stainless steel mono-pole 25
Figure 10: Typical layout schematic of a marsh well continuous recorder station 28
Figure 10A: Detailed drawing of a marsh well for a continuous recorder 29
Figure 11: Typical construction diagram for a staff gauge installation 31
Figure 12: Typical layout schematic of a soil porewater setup 34
Figure 12A: Detailed drawing of a soil porewater well 35
Figure 13: Distances required for elevation calculations of wooden post recorders 48
Figure 14: Distances required for elevation calculations of mono-pole recorders 51
Figure 15: Construction diagram for the floating marsh mat recorder system 80
Figure 16: Construction drawing for the instrument housing unit 94
Figure 17: Schematic of a static marsh mat continuous recorder station 96
Figure 18: Construction drawing of a soil porewater sipper 107
Figure 19: Construction drawing of a surface elevation table used on a 9/16" benchmark rod 114
Figure 20: A typical RSET data collection schematic. 115
Figure 21: Schematic for the rotation of accretion plots at an attached marsh site 127
Figure 22: Schematic for the rotation of accretion plots at a floating marsh site 128
Figure 23: Schematic for the cryogenic coring device 131
Figure 24: Illustrated example of proper densiometer values 147
Figure 25: Typical specifications of a core extracting device 152
Figure 26: Diagram of boardwalk area and area available for sediment sample collection 153
Figure 27: Typical construction diagram for the soil core extruder 155

LIST OF TABLES

Table 1. Materials list for base boardwalks 12
Table 2. Minimum standards for the handheld water quality units 66
Table 3. Vegetative cover values associate with the Braun-Blanquet method 138
Table 4. Soil parameters and associated units with acceptable ranges 160

ACKNOWLEDGEMENTS

Leigh Anne Sharp and Brian Perez made extensive contributions to the RSET and Soil Properties chapters. Greg Steyer, Erick Swenson, Jenneke Visser, and Guerry Holm made contributions to this document. We are grateful to Richard Raynie, Darin Lee, John Troutman, Dona Weifenbach, Melissa Hymel, Jonathan Barmore, Bill Boshart, Brady Carter, Donald Rodrigue, Mike Miller, Mark Mouledous, Troy Barrilleaux, Justin Price, David Castellanos, Larry Reynolds, and Sydney Dobson for constructive comments, suggestions, and criticisms during the preparation of this document. Glen Curole, Elaine Lear, Todd Hubbell, and Karen Gray provided preliminary drafts for various chapters. Most figures were produced in AutoCAD by Shane Triche.

EXECUTIVE SUMMARY

With the implementation of a Coast-wide Reference Monitoring System-*Wetlands* throughout southern Louisiana's coastal wetlands, the development of a new document updating and outlining the standard operating procedures for site selection and establishment, data collection, maintenance of data integrity, and data storage of all coastal restoration projects and reference sites was required. This document provides the necessary procedures for the Louisiana Department of Natural Resources' (LDNR) personnel to perform: (1) preliminary site visits; (2) site construction; (3) water level measurements; (4) salinity measurements; (5) vertical marsh mat movement; (6) soil porewater salinity measurements; (7) surface elevation table measurements; (8) accretion measurements; (9) emergent vegetation sampling; (10) sampling of wetland soils for soil characteristics analysis; (11) submerged aquatic vegetation sampling; (12) shoreline position measurement; (13) and land/water analysis. Within each section, we provide an overview and introductory material for each separate analysis. We then outline the steps necessary to establish each station, to carry out each sampling design, and to maintain data quality and integrity from data collection to data uploading into the LDNR databases.

1. INTRODUCTION

Currently, coastal Louisiana is experiencing a loss of approximately 25 - 35 square miles of land per year and since the 1930's over 1,900 square miles of valuable wetland habitat have disappeared (Barras et al. 2003). In response to accelerated wetland loss, a multi-agency task force, including many federal and state sponsors, created the Coastal Wetlands Planning, Protection, and Restoration Act (CWPPRA) of 1990 to conserve, restore, create, or enhance coastal wetlands. Under CWPPRA, the establishment of project-specific monitoring resulted in the formation of various data collection variables within the boundary of each CWPPRA project. In association with the data collected in the project boundary, areas in the immediate vicinity and similar in nature were selected as reference sites. By comparing data collected within the project boundary and the reference sites, the project features were evaluated for their effectiveness with respect to the goals and objectives set forth in each project's monitoring plan. This project-specific approach was very effective for small-scale projects, but was not effective for studying and evaluating larger, cumulative effects, or broad-scale ecosystem effects at the hydrologic basin or coast-wide scale.

In the late 1990's, the LDNR/CRD began investigating the implementation of the Coast-wide Reference Monitoring System-*Wetlands* (CRMS-*Wetlands*) program. The CRMS-*Wetlands* approach randomly selects stations throughout the coastal zone in accordance with the vegetative community (from Visser and Sasser 1998); consequently, the monitoring will be associated with the entire coastal region of Louisiana. This program will allow the LDNR/CRD to better understand problems associated with the loss of coastal marshes as well as provide a valuable long-term ecological data set for southern Louisiana, make available reference data to determine overall trends, and serve as reference sites to test the effectiveness of different restoration/enhancement measures.

Concurrent with this new approach, the LDNR/CRD decided the Standard Operating Procedures (SOP) needed updating with respect to site selection, station construction, data collection methods, data management, data quality, and data interpretation. With the implementation of CRMS-*Wetlands* in 2004, the SOP was disassembled and re-written to correspond with the procedures recommended by the Louisiana Department of Natural Resources/Coastal Restoration Division (LDNR/CRD). The new SOP will serve as the document for consultation with respect to all data collection variables as they relate to field establishment, site / station construction, data collection, data processing, Quality Assurance (QA) and Quality Control (QC), and data storage. This SOP will assure that the results of any technical work have adhered to specific standards suitable for their intended use.

Data collection plays a critical role in determining any project's effectiveness at achieving long-term goals. To this end, it is crucial that data collection must be consistent and repeatable by all parties involved with CRMS-*Wetlands*, project-specific monitoring, and throughout all coastal wetlands. Since data collected from each of these sites will be made available to not only the public, but also used to publish the coast-wide trends and status report and evaluation of projects aimed to restore, enhance, or conserve coastal ecosystems, it is imperative that these procedures are followed to achieve precise, accurate, repeatable, acceptable, and accredited data (Bass et al.

2003). This document outlines the updated SOP to be implemented with CRMS-*Wetlands* and to be used for project-specific monitoring by the LDNR/CRD. It provides field-tested, step-by-step methods to establish data collection sites and to collect data for multiple variables used in coastal restoration projects. Additionally, it outlines a sound QA/QC program to be maintained for data quality and integrity.

2. PRELIMINARY SITE VISIT

Once the LDNR/CRD has acquired land-rights and/or access permission to a particular site, a preliminary site visit is necessary to verify that the proposed area will be sufficient for the LDNR/CRD purposes and to ascertain the logistics for the site. The objectives for the preliminary site visit include determining the approximate location and length of the boardwalk which will establish the placement of various data collection stations, determining the location of a continuous salinity and water level recorder, and providing a general characterization of the site.

Prior to the preliminary site visit, travel logistics and proposed site locations shall be determined by reviewing the Land Rights Packet supplied by the Land Rights Section (LRS) of LDNR/CRD. This Land Rights Packet will provide who to notify before visiting the site (if necessary), restriction information (if any), directions to the site, and various maps. The directions to the site may include roadway access, the nearest town/city, location of boat ramp (if applicable), and directions to the center of the site (e.g., water vessel path from boat ramp to site). LRS will have only acquired access permission for each of these components and travel should be restricted to the directions and paths outlined in the packet. LRS will also provide maps such as digital orthophoto quarter-quadrangles (DOQQ) or SPOT imagery and Tobin plat maps. These maps will provide the location of the site and highlight areas with land rights. Although land rights to the site may have to be secured, packages must be reviewed for access route permission.

For those sites where the field personnel are not familiar with the area or particular site, it may be advantageous to utilize the most current geo-rectified imagery. By using this imagery in a Geographical Information System (GIS) software package, field personnel will be able to plan an access route if the maps from the land-rights package are not sufficient. Field personnel may need to print out route maps or site specific maps depending on their familiarity with the area.

Field personnel shall approach the site with great care to maintain site and data collection integrity. In some areas, depending on site location, land-rights, accessibility, or marsh type, additional boardwalk (known hereafter as the Access Boardwalk) may need to be constructed to reach the base boardwalk [a twenty foot boardwalk with a ten foot boardwalk on either side of the terminal end in attached marshes or swamps (Figure 1) and a continuous thirty foot boardwalk in floating marshes (Figure 1A)]. The preliminary site visit will aid in determining the layout and direction of the base boardwalk, and the length of any access boardwalk, if needed, from where the water vessel is parked. This information will facilitate the construction of the site such that the proper amount of materials can be brought to the site. The location of the base boardwalk, the approximate positioning of the sampling stations (e.g., RSET, accretion, water-level instruments), and the coordinates of vegetation starting points and ending points will also be scouted. Any potential problems will be noted.

During the site visit, field personnel shall complete the two page “Site Characterization Sheet” (Appendix A, Form 1), the “Site Sketch Sheet” (Appendix A, Form 2), and photograph the area. This information/data sheet will characterize the proposed site to determine if the site is suitable

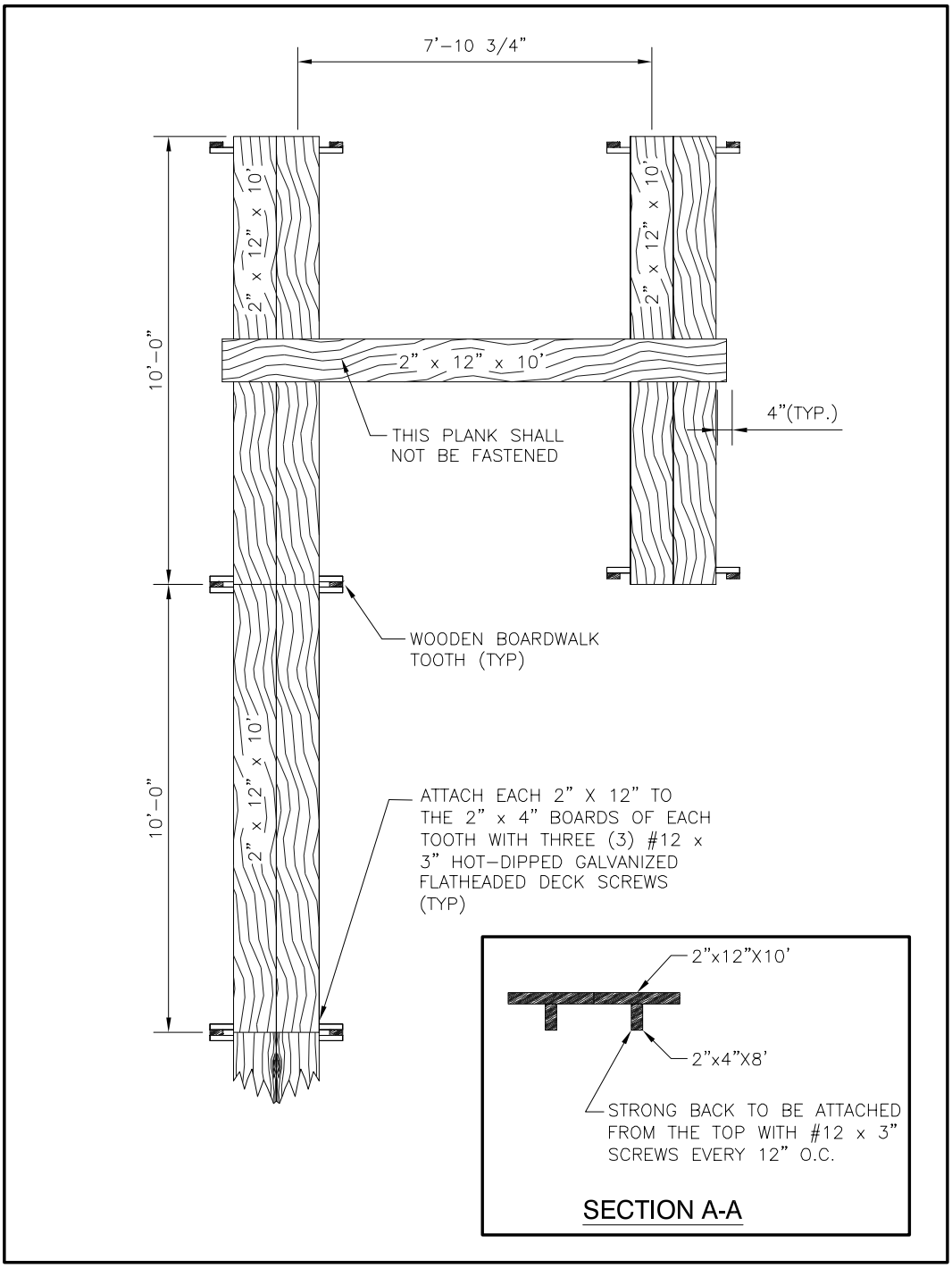

Figure 1: Typical schematic of a base boardwalk in an attached marsh.

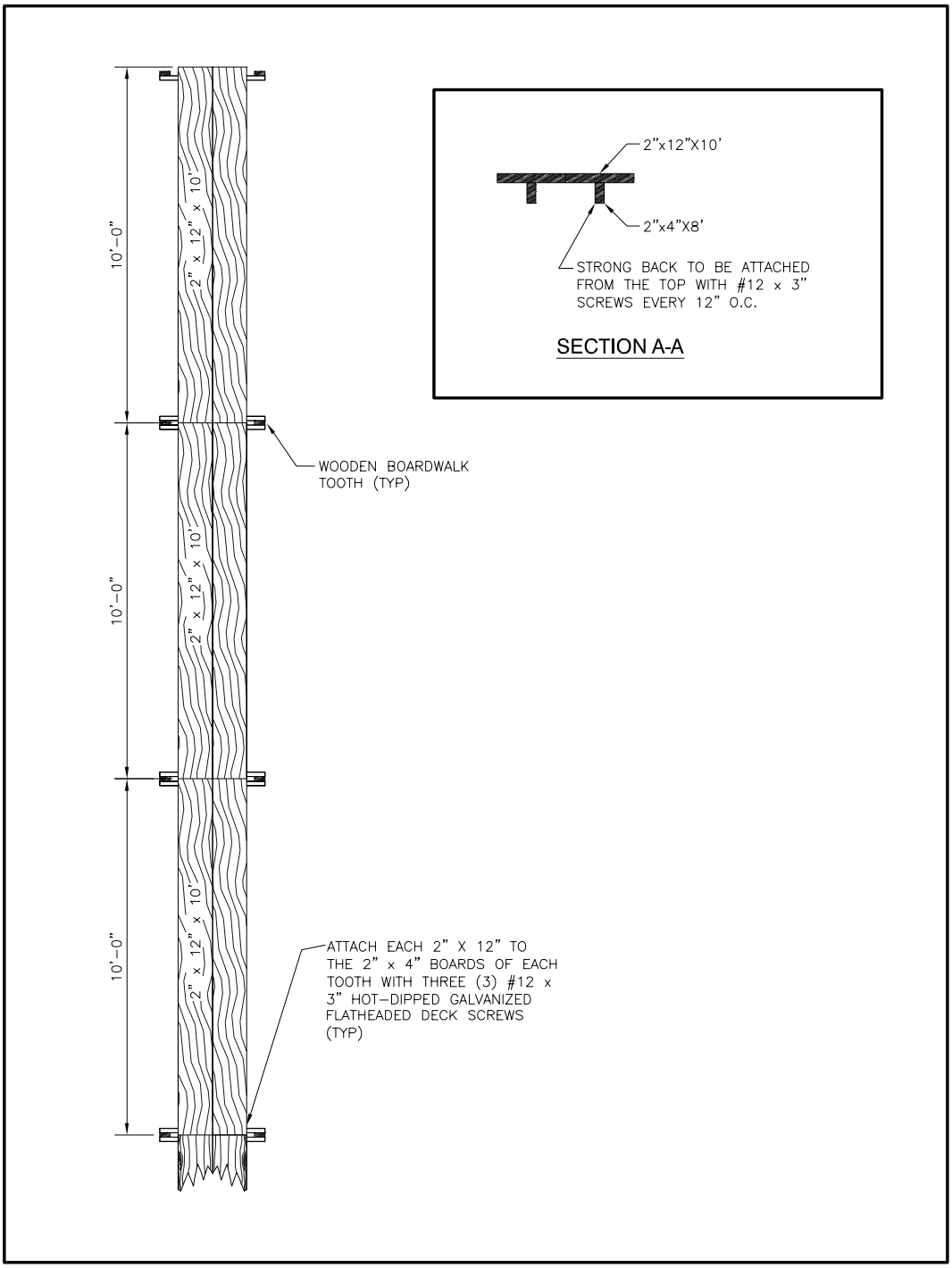

Figure 1A: Typical schematic of a boardwalk in a floating marsh**.**

for the requirements specified in the project's overall goals and objectives. This information will also provide sufficient documentation for the construction phase of the project.

The construction personnel will be able to construct the necessary boardwalks and stations without having to decipher the goals and objectives of the project. The two page "Site Characterization Sheet" will provide enough details that the construction personnel shall deliver the appropriate amount of materials to the site during construction.

The following section provides a list of the minimum materials / equipment necessary to perform an adequate preliminary site visit and evaluation.

2.1. Materials / Equipment (minimum)

1. Compass: 0° to 360° azimuth dial with 2° graduations
2. Digital Camera with Date Stamp capabilities
3. Measuring tape: capable of measuring 100 meters (~328.1 feet)
4. Differential Global Positioning System (DGPS) Unit: capable of real-time correction
5. Maps
6. "Site Characterization Sheet" (Form 1)
7. "Site Sketch Sheet" (Form 2)
8. Pencils and pens
9. PVC poles to mark locations for infrastructure installation (e.g., boardwalk(s), continuous recorders)
10. Soil corer for floating marshes
11. Survey rod
12. Salinity meter

2.2. Site Visit Procedures

The Land Rights Packet should provide access restrictions (e.g., airboats are prohibited in the wildlife management area during duck season) as well as identify any areas to avoid while in transit.

1. Using the Land Rights Packet, "Site Characterization Sheet", GPS coordinates, and/or other maps, travel to the center of the 200 x 200 m square site, if logistically possible, carefully as to not damage the site for data collection purposes.
2. Using the CRMS-*Wetlands* Preliminary Site Visit Decision Tree (Figure 2), determine if the proposed 200 x 200 m site is sufficient for the goal of the project. If the site is sufficient for the goal of the project, then continue to collect the necessary information needed to complete the "Site Characterization Sheet." If the 200 x 200 m site is not sufficient, continue using the decision tree until a site is selected. The site shall be moved in 100 m increments away from its original position while trying to remain close to the center of the 1 km square, within the same vegetation community, and having a water-body that is deep enough to continually submerge the sensors during periods of low water. Once a site has been selected, complete the "Site Characterization Sheet."

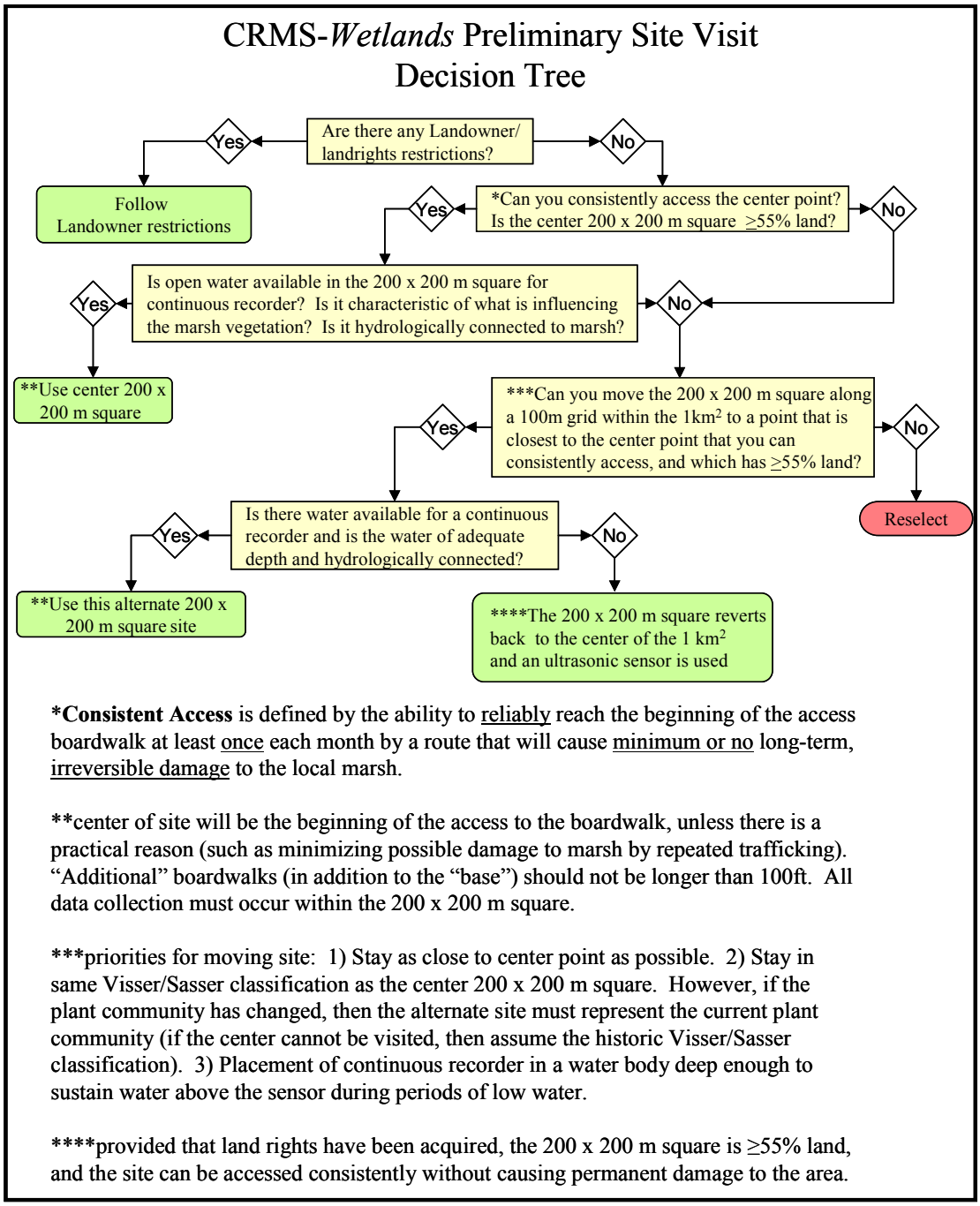

***Consistent Access** is defined by the ability to reliably reach the beginning of the access boardwalk at least once each month by a route that will cause minimum or no long-term, irreversible damage to the local marsh.

**center of site will be the beginning of the access to the boardwalk, unless there is a practical reason (such as minimizing possible damage to marsh by repeated trafficking). "Additional" boardwalks (in addition to the "base") should not be longer than 100ft. All data collection must occur within the 200 x 200 m square.

***priorities for moving site: 1) Stay as close to center point as possible. 2) Stay in same Visser/Sasser classification as the center 200 x 200 m square. However, if the plant community has changed, then the alternate site must represent the current plant community (if the center cannot be visited, then assume the historic Visser/Sasser classification). 3) Placement of continuous recorder in a water body deep enough to sustain water above the sensor during periods of low water.

****provided that land rights have been acquired, the 200 x 200 m square is ≥55% land, and the site can be accessed consistently without causing permanent damage to the area.

Figure 2: CRMS-Wetlands Site Decision Tree used to determine the placement of the 200 x 200 m site within the 1 km square.

3. Use a DGPS unit to document the coordinates of the beginning of the base boardwalk (if it has deviated from the center of the 200 x 200 m square) and/or the access boardwalk. Record the GPS coordinates (in UTM, NAD83 Meters). Using a compass, determine the bearing (in degrees) and approximate length (in feet) that the boardwalk will extend, if there needs to be an access boardwalk. Document this in section 3 of the "Site Characterization Sheet".
    a. NOTE: The maximum distance of access boardwalk is 100 feet.
    b. NOTE: PVC markers may be left at the site to mark the exact location; however, enough information should be obtained to not rely solely on the markers. It is possible that the markers may be removed by others before construction of the site begins.
4. Determine the orientation of the vegetation transect, northwest to southeast or northeast to southwest and document the decision in section 4. If the transect can be placed either direction, it should be decided randomly (a flip of a coin or some other method). Vegetation transects should not parallel any geologic feature or human-induced feature, (i.e., spoil banks), nor a vegetation community that is uniform. The objective of the vegetation transect is to characterize the plant community within the site.
5. At the start of the boardwalk location, take a few pictures from an elevated position into various directions (preferably N, E, S, and W) to provide a historical reference snapshot prior to site construction. Note each picture's number, direction, and time stamp in section 5.
6. Record the dominant vegetation species in the site in section 6 and characterize the marsh condition (e.g., any notable ecological/biological attributes, evidence of nutria herbivory, noticeable causes of degradation such as salt water intrusion, etc.) in section 7.
7. If the site is a floating marsh, then the marsh mat must be cored to determine its thickness and the depth from the surface to the firm clay layer below the mat. These measurements are documented in section 8. Describe other characteristics of the marsh (e.g., any notable ecological/biological attributes, nutria herbivory in area, noticeable causes of degradation such as salt water intrusion, etc.) that may be beneficial for construction and/or historical records.
8. Briefly describe any potential problems that may arise during initial site construction or during routine sampling of the site and make any recommendations for subsequent site visits in section 9. Also, if the center point of the 1-km^2 or other alternate sites selected in the office while examining the maps is not being used, then document the reason for moving the center point once the sites have been field investigated.
9. Before leaving the site, sketch the major landscape features such as ponds, waterways, marsh/swamp, etc. (Appendix A, Form 2: "Site Sketch Sheet") within the 200 x 200 m square and any other important features that would assist the construction crew in locating the proper location for construction features. Also sketch the layout of the boardwalk and placement of stations within the square in the proper directions. Any features that are outside of the square that are relevant to the site should be placed outside of the square.
10. Determine the best location for the continuous salinity/water level recorder. Obtain and document the coordinates for its location, recommend the type of set-up needed to

deploy the instrument, and describe the location (size and depth of the water body, consistency of the bottom, distance from edge of emergent vegetation, etc.). When determining a location for a continuous salinity and water level recorder, remember that the depth of the water body shall maintain a depth that will continually submerge the sensor during periods of low water, especially during the winter months.

Upon return from the preliminary site visit, use GIS software to upload the DGPS coordinates for all points that were collected in the field. A map may be produced with the locations of these sampling stations incorporated into the map to facilitate the construction phase.

2.3. Deliverables

Upon completion of the site visit, the information obtained from the field shall be typed onto the electronic version of the "Site Characterization Sheet" (Appendix A, Form 1). This shall eliminate the need to decipher illegible field notes. All downloaded pictures (JPEG images) from the field shall be viewed and the file names shall be renamed to describe the site, direction of the picture, and date (e.g., CRMS0395_N_03112004.jpg or there may need to be more descriptive file names). The "Site Sketch Sheet" shall be attached to the typed version of the "Site Characterization Sheet." The final deliverable shall consist of an Adobe Acrobat .pdf file containing the field completed "Site Characterization Sheet" form, the Excel file with the typed version of the "Site Characterization Sheet" and photos, the hand drawn "Site Sketch Sheet," and a copy of any map that was produced to access the site and boardwalk location. Any map that is produced shall contain the following information: a north arrow, a scale bar, the site number, the date and any information concerning the background imagery, a legend, and a unique map identification number for future map reproduction.

Producing a field trip report may be beneficial to enhance the information provided in the deliverable packet. Every site may not fit into the "Site Characterization Sheet"; consequently, a field trip report would provide a method for enabling the field personnel to describe the field conditions and conveying the information necessary needed to decide whether the site shall be used or moved to a different location.

3. Site Construction

Once the site has been approved by the LDNR/CRD, a copy of the deliverables from the Preliminary Site Visit shall be provided to the construction crew. Upon receipt, a quantity calculation of the necessary materials should be performed to assess how much material is needed to construct the site. The information will also provide the route to the site, the type of water vessel needed, and other pertinent information necessary to completely construct the site. It is very important to maintain the integrity of the study; consequently, any surface alteration that occurs during the construction phase shall result in the LDNR/CRD not accepting the site and requiring the construction of the site at another location.

Two marsh types, non-floating/attached and floating, will require different construction elements. Attached sites will require the construction of a boardwalk, the installation of a deep rod similar to a survey monument for the Rod-Surface Elevation Table (RSET), a water level support pole, staff gauge, warning signage, and soil porewater stations. Floating sites will require the construction of a boardwalk, a marsh mat recorder, a water level support pole, staff gauge, warning signage, and soilpore water stations. A general site configuration is shown in figure 3 for an attached marsh site and figure 4 shows the configuration for a floating marsh site; however, each site-specific configuration will be determined by the LDNR/CRD prior to construction. LDNR/CRD will approve the site configuration based on site investigations and/or information provided to LDNR/CRD through the deliverables obtained from the Preliminary Site Visit (Chapter 2).

Upon completion of the site construction or the establishment of any data collection station, differential global positioning system (DGPS) units shall be utilized to collect the horizontal position of the station. A DGPS unit shall collect the station coordinate using the Universal Transverse Mercator (UTM), North American Datum of 1983 (NAD83), Meters coordinate system. Each data collection station shall be labeled using the naming convention established by the DNR/CRD/BMS. After returning from the field with the station coordinate, two Excel spreadsheets shall be maintained. These two spreadsheets include the 'CoordsTemplete.xls' which is a file that maintains all the stations and their associated coordinates and the 'MonstatTemplate.xls' which maintains the type of data that is collected at the station and the frequency the data is collected. These two files shall be provided by DNR since the files contain pick lists which assures consistency for the department's database. The file names shall be changed to coincide with the project in which the station and data are associated. The formats for each of these files are found in Appendix B, Formats 1 and 2 which serve as examples and should not be used to create individual files.

This chapter provides a materials list and construction procedure for the base boardwalk, the deep rod for the RSET, warning sign placement, water level support pole, staff gauge installation, soil porewater stations, and elevation surveys that will be constructed, installed, or performed at each site. Some sites may require a longer boardwalk depending on land-rights, accessibility, marsh type, etc., but the construction and material types will remain the same, just in a larger quantity.

3.1. Sampling Platform Materials List

All wooden materials used to construct the boardwalk or data collection stations shall consist of pressure treated materials or equivalent. The only preservative that is recommended for brackish and saltwater usage is chromate copper arsenate (CCA). Therefore, all treated material used for the construction of data collection sites for the LDNR/CRD shall consist of the CCA preservative. The lumber industry treats the raw wood using three levels of retention: 0.6 pounds per cubic foot (pcf) for salt splash, 0.8 pcf for brackish water environments, and 2.5 pcf for saltwater environments. Because LDNR/CRD requires the use of lumber in sizes that may not retain the maximum retention level (2"x4" and 2"x6"), it is required to specify the material needs to be treated in the method used to obtain the highest retention levels in the larger size lumber and communicate its usage to the manufacturer.

When calculating the quantity of materials needed and the levels of retention required, LDNR/CRD requires the following retention levels: (1) materials being placed into the soil and/or water in a brackish or saline environment shall be treated with the maximum level of retention, i.e., 2.5 pcf for saltwater environments and (2) materials being used for decking (2"x12") and all material being used in freshwater environments shall be treated with 0.6 pcf rating for salt splash.

Table 1: Materials list for the base boardwalks (Figure 3 and 4).

Material Type	Quantity for Attached Marsh	Quantity For Floating Marsh
2" x 4" x 24" treated board	15	12
2" x 4" x 8' treated board	10	8
2" x 12" x 10' treated board	7	6
3/8" x 4" hot-dipped galvanized bolt	10	8
3/8" x 6" hot-dipped galvanized bolt	10	8
3" hot-dipped galvanized wood screws	36	36

Recommended tools: hand saw or skill saw to cut boards, cordless drill with various size wooden bits and screwdriver heads, crescent wrenches, socket wrenches, sledge hammer, tape measure, gloves, and hammer. NOTE: Personnel protection equipment (PPE) shall be worn during all phases of material handling.

.

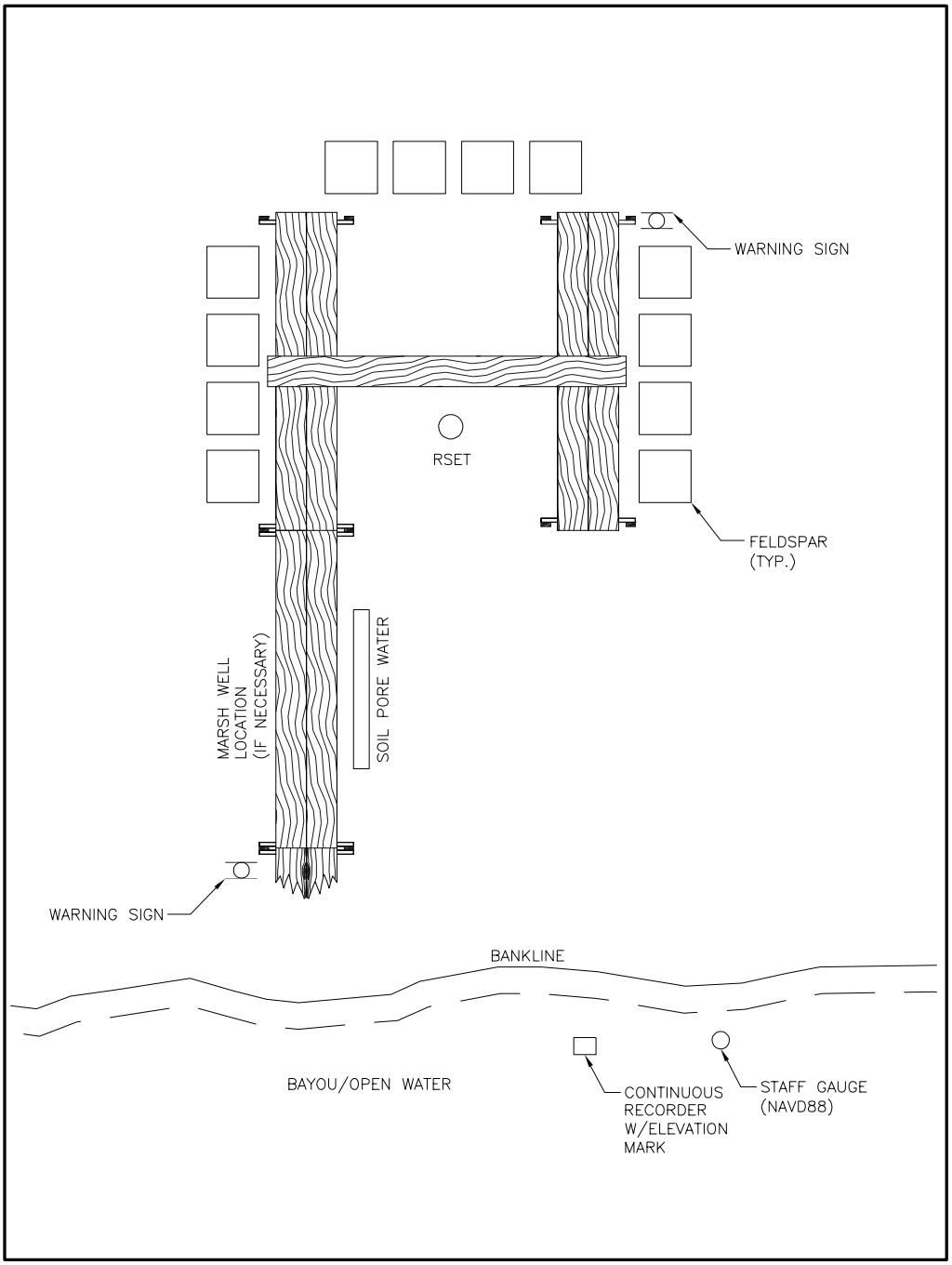

Figure 3: Typical layout schematic of the constructed site features at an attached marsh site.

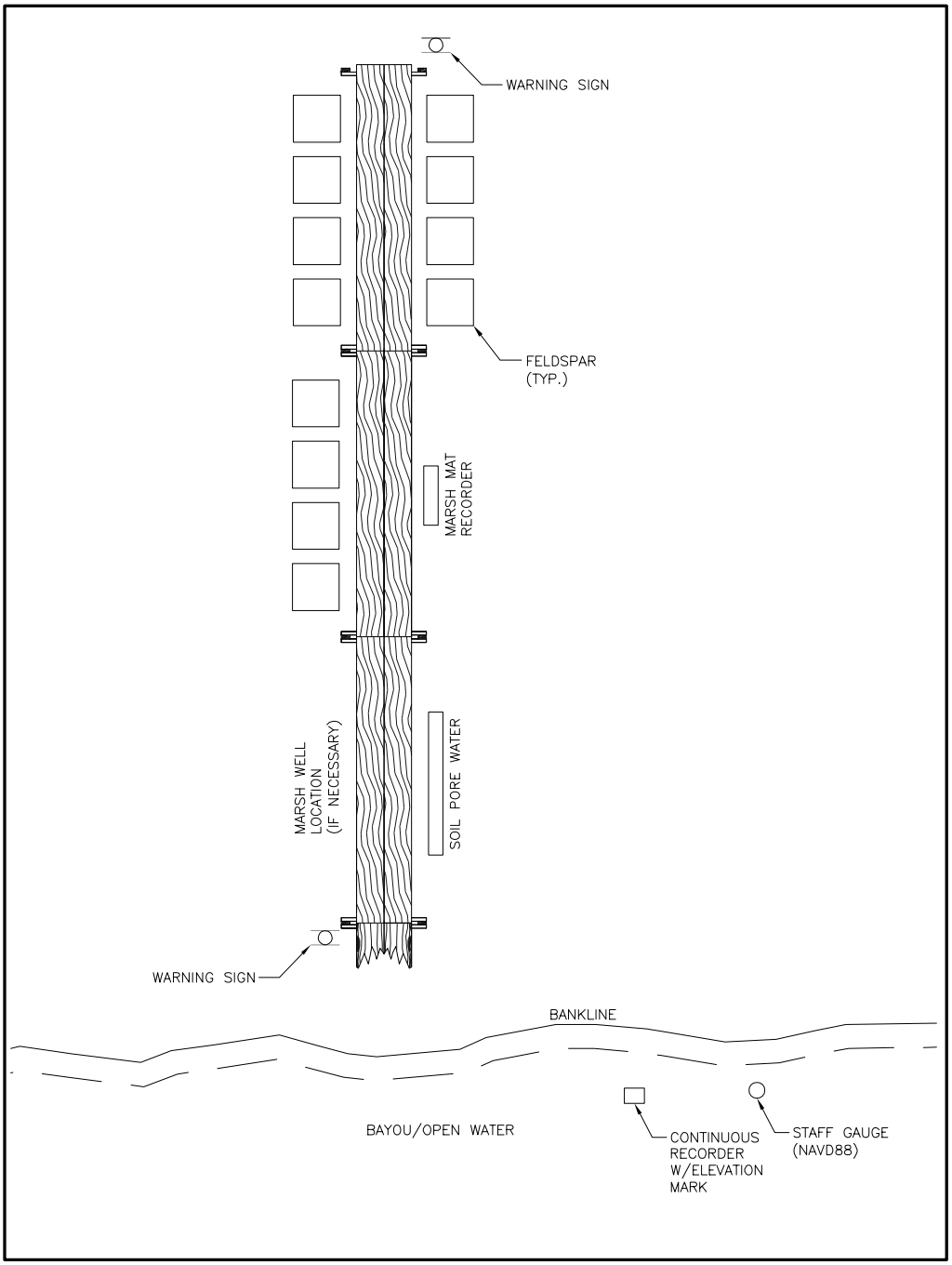

Figure 4: Typical layout schematic of the constructed site features at a floating marsh site.

3.2. Sampling Platform Construction

The main part of the boardwalk platform is called a tooth and is comprised of two (2) legs (2”x4”x8’or 10’) attached to three (3) crosspieces with the hot-dipped galvanized carriage bolts. This part of the boardwalk can be assembled before constructing the boardwalk in the field. If the water vessel is not large enough to safely handle the assembled teeth, it is highly recommend that the teeth be disassembled. A typical tooth construction is found in figure 5.

Using the LDNR/CRD approved “Preliminary Site Visit” deliverable packet, enter the 200 x 200 m site using the pre-determined route access. When accessing the area for the base boardwalk construction, a 10 m (32.8 ft) buffer zone shall be observed. In this buffer zone, there shall be neither airboat travel nor any foot traffic except for the point of accessing the boardwalk. Once the access point has been established, there shall be no access from the other side of the boardwalk. The boardwalk shall be accessed from the same location during every site visit. This will ensure that the site will not be compromised by the construction personnel nor any personnel visiting the site for future data collection efforts. Other stations will be established adjacent to the boardwalk; therefore, the route access must be followed at all times. Upon arrival at the access point of the boardwalk, the construction personnel shall begin the construction of the boardwalk from the water vessel. This will prevent any disturbance to the site.

The following procedures shall be followed to assure proper installation without damaging the marsh or swamp surface.

1. Using the approved “Preliminary Site Visit” deliverable packet, the construction crew shall arrive at the coordinates designated for the beginning of the boardwalk (access point).
2. Determine the orientation/direction of the boardwalk from the water vessel using the provided information.
3. Place the sharpened end of the tooth onto the marsh / swamp surface.
4. Using the weight of the person installing the tooth, drive the tooth into the surface of the marsh / swamp. NOTE: To facilitate the installation, the four 3/8” carriage bolts should be loosened to allow the legs to penetrate into the marsh surface independently.
5. The bottom support piece shall rest on the marsh surface or to a maximum of eight (8) inches above the surface.
6. Tighten all four carriage bolts once the tooth has been driven to the proper position above the marsh surface. This shall secure the tooth from any horizontal movement.
7. Once the tooth has been installed, lay one end of a 2”x12”x10’ board on the tooth (preferably on the cross piece closest to the marsh surface) with the other end placed on the marsh where the next tooth will be installed.
8. Standing on the end of the board and **NOT** on the surface of the marsh, install the next tooth.

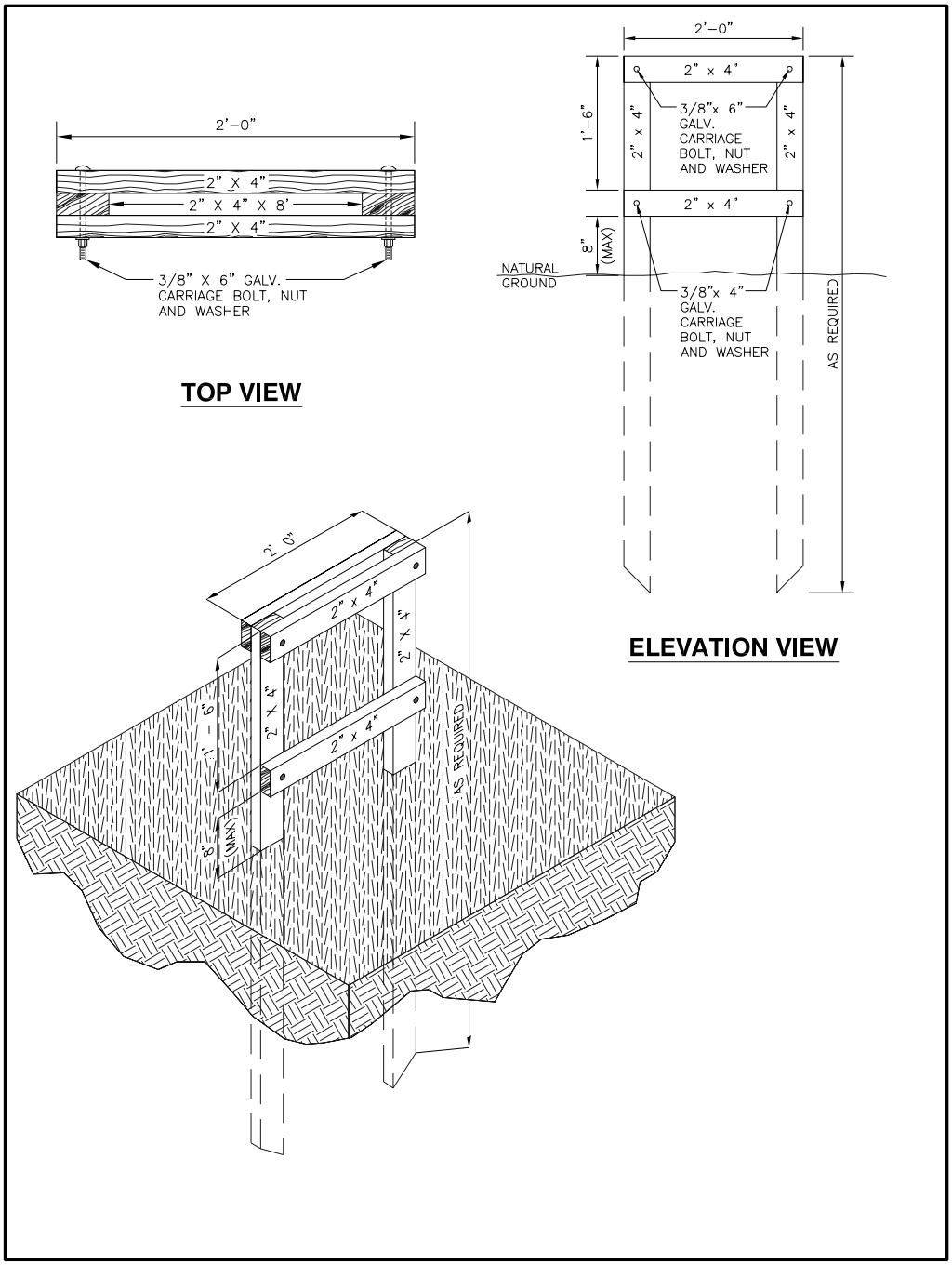

Figure 5: Tooth construction diagram used to support the boardwalk for access to the data collection stations.

9. Place two 2”x12”x10’ boards between the two teeth. Secure the boards to the teeth using the 3” screws. NOTE: Decisions may be made to leave only a portion or none of the boards in place to reduce the risk of vandalism.
10. Repeat steps 3 thru 9 until the boardwalk is to its desired length.

Due to the span length (10’) with no support, the 2”x12” boards may need to be connected by using a small piece of 2”X4” board. This would prevent the boards from flexing separately and would reduce the flexibility of the boards providing for a more stable platform to traverse.

When constructing base boardwalk in an attached marsh or swamp, a 10 ft boardwalk shall be constructed parallel to the previously constructed 20-foot section on either side. The “Preliminary Site Visit” deliverable packet instructs the placement of the 10 ft boardwalk.

1. From the middle tooth of the base boardwalk (2nd tooth from the end) place a 2”x12”x10’ board perpendicular to the boardwalk on the appropriate side of the marsh/swamp surface.
2. Place the tooth such that the inside of the tooth is approximately 7.5 ft from the tooth of the constructed boardwalk. Orient the tooth such that the 10 ft section will parallel the longer section.
3. Construct the boardwalk following steps 3-9. The end product shall resemble figure 3.

In a floating marsh, the boardwalk will be one long boardwalk with no flanking boardwalk since these sites do not have RSET stations. The end product shall resemble figure 4.

During the construction of the site, no one shall walk on the surface of the marsh / swamp at any time. It is imperative that this be followed since the integrity of the data that will be collected at a later date depends on the natural functions of the wetland in an undisturbed manner. Failure to follow this guideline shall result in the construction of another site at another location at the expense of the contractor. The replacement site would be determined by the LDNR/CRD.

3.3. Rod-Surface Elevation Table

Upon completion of the boardwalk in an attached marsh, the deep rod needed for the rod-surface elevation table (RSET) will be established from the boardwalks in the center (Figure 3). Once again it is imperative that the installation of the rod for the RSET be performed without disturbing an area with a maximum diameter of six inches. The rod for the RSET will be established using the guidelines set forth in Cahoon et al. (2002). This paper describes the design of the surface elevation table (SET) that will be supplied by the LDNR/CRD and the two types of benchmarks that can be used with the SET. However, the LDNR/CRD will only establish the deep rod benchmark.

Deep Rod Benchmark Materials List

1. Multiple 9/16" diameter by 4 foot stainless steel rods with threads (Berntsen SS91604 or equivalent)
2. 9/16" diameter stainless steel drive point (Berntsen SS12 or equivalent)
3. Locking connector thread (Berntsen M13 or equivalent)
4. Steel drive pin for a 9/16" diameter rod (Berntsen M1DPA or equivalent)
5. Power driving adapter (Berntsen PDA or equivalent)
6. Loctite cement for stainless steel
7. PVC, Schedule 40, 6" diameter by 3-4 feet
8. Cement mix
9. Collar and screws (Figure 6, inset; provided by LDNR/CRD)

Installation Materials List

1. Power driving device (Pionjar 120, Cobra 148, or equivalent)
2. Pipe wrenches (two 6" wrenches)
3. Post hole digger (maximum 6" diameter)
4. Hacksaw
5. File
6. 2"x12"x10' treated board (2)
7. Cement mixing equipment: bucket, shovel, water, etc.
8. Personal Protective Equipment: minimum eye protection, gloves, and ear plugs
9. Hammer or small sledge hammer
10. Bucket to remove the soil

Deep Rod Benchmark Installation Procedure

1. Place the board(s) across the two existing boardwalks where the rod for the RSET will be installed. If more than one person will be installing the rod for the RSET, a second board shall be used for safety.
2. Using a post-hole digger, dig a hole 1-1/2 – 2 ft. deep with a maximum diameter of 6 inches in the center between the two boardwalks and the center of the 10-foot boardwalk (Figure 3). <u>NOTE:</u> All soil or surface material extracted from the hole shall be placed in a bucket and not on the marsh/swamp surface. Upon completion, the extracted material must be discarded outside of the 200 x 200 m site. No soil or extracted material shall remain on the surface.
3. Drive the 9/16" stainless steel rods in the center of the hole to refusal using the manufacture's recommended procedures for the rods. These procedures shall include the use of all the materials listed in the benchmark materials list. <u>NOTE:</u> Refusal is defined as "No more than 1 foot of penetration of the rod in one minute of impacting with a gasoline powered reciprocating driver (i.e., Pionjar 120, Cobra 148, or equivalent)." Also the rod must be plumb at the end of the installation.

4. The rod shall remain 2 ft. above the marsh surface after the rod is driven to resistance. Any excess shall be cut with a hacksaw.
5. Position the 6" PVC such that the 9/16" stainless steel rod is at the center. Push the PVC pipe into the soil until 2-4" remain above the surface. A small hammer may be used depending on the soil characteristics.
6. Mix enough concrete to fill the PVC. NOTE: When mixing the concrete and or filling the PVC, no concrete must remain on the sediment surface outside the PVC.
7. Fill the PVC. Be sure not to overflow the PVC.
8. Slide the collar 8" below the top of the stainless steel rod.
9. Position four of the eight holes on the collar to point towards the four corners of the surrounding boardwalk. The number one on the collar shall point towards the warning sign which is located on the outside of the corner of the 10-foot section of the boardwalk
10. Attach the collar in the position using the 4 screws and loctite cement. Be sure not to move the rod when fastening the collar, if the cement is still wet. The final product shall resemble figure 6.

Documentation shall be made as to the depth of refusal and the distance from the top of the rod to the top of the collar at each site and include the number of rods used during the installation as well as a total rod length in feet. Pictures shall contain a date stamp. These pictures will ensure the LDNR/CRD that the surface adjacent to the monument was not disturbed and that the RSET was properly installed.

When establishing the elevation of the rod for the RSET using real-time kinematic (RTK) surveying methods, no equipment shall touch the surface between or within a 10 meter (32.8 ft) buffer zone around the boardwalk. Since this area is being used for the collection of scientific data, any instrumentation or equipment that is placed on the marsh / swamp surface may compromise the efforts of the scientific community. Consequently, all the equipment that is used to determine the elevation of the benchmark must be raised using a technique that meets the requirements of the surveyor and meets approval from the LDNR/CRD.

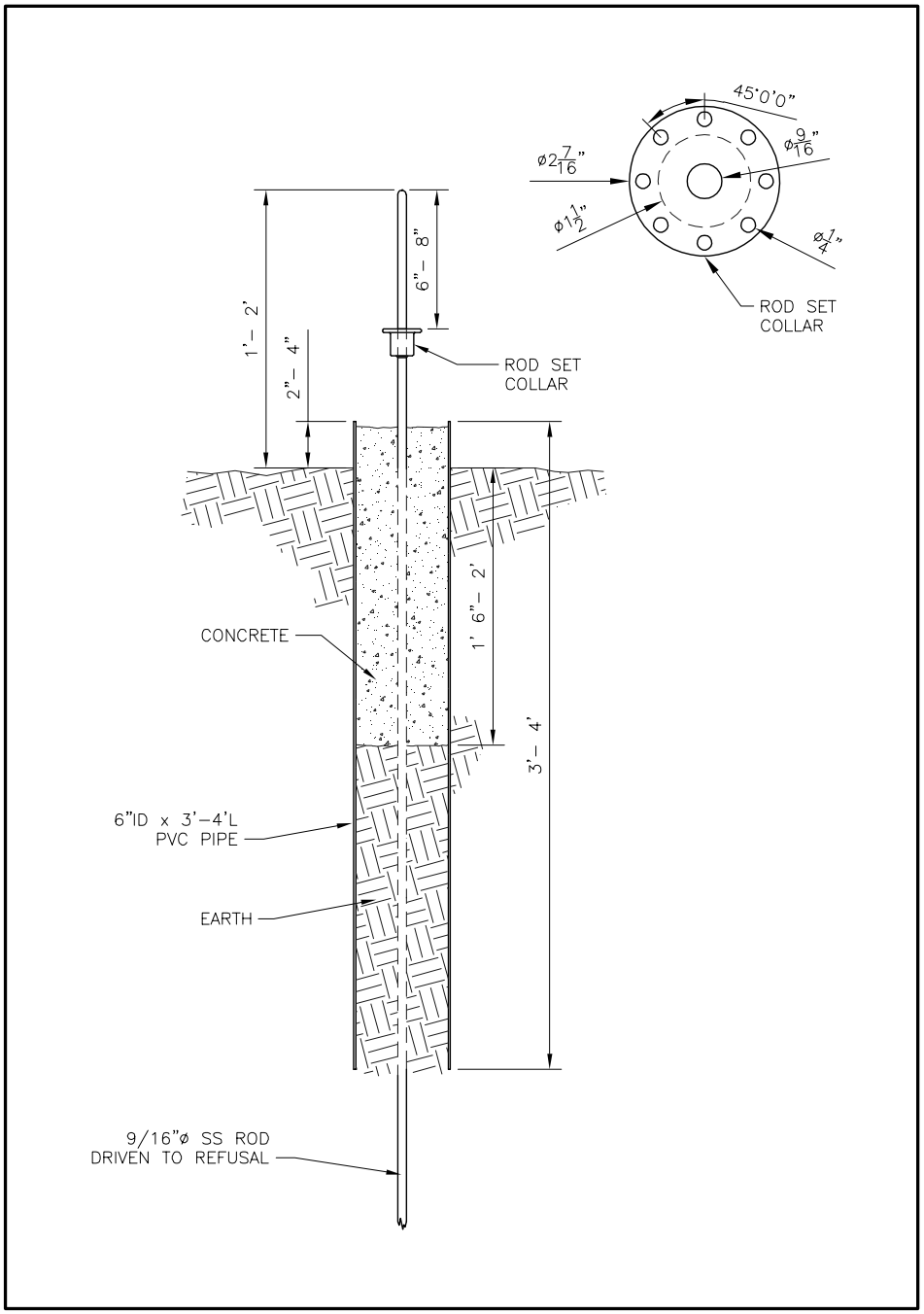

Figure 6: Detail construction drawing of a typical RSET station with collar. Inset: Collar detail. The number one on the collar always faces towards the warning signage at the far end of the boardwalk.

3.4. Warning Signage

Two warning signs (Figure 7) similar to those used for pipelines will be placed adjacent to the boardwalks on the outside of two diagonal corners. One sign will be placed on the outside of the boardwalk near the access point and the other sign will be placed on the outside of the shorter boardwalk (Figures 3 and 4). This configuration signifies that caution needs to be taken when entering the area between the signs. Also, there shall be no water vessel or foot traffic within a 10 m (32.8 ft) buffer zone around the boardwalk except for the access point.

Recommended signage will consist of a single 3-4" pipeline marker with an orange cap, similar to that shown in Figure 7, or other design or color that is highly visible, distinctly different from pipeline or other markers, and approved by LDNR/CRD. LDNR/CRD recommends the use of two different colors at each site whereby one color represents the access point and the other color represents off limits at all times. The sign shall extend at least 60 inches above the marsh surface and extend at least 36 inches into the soil.

Figure 7: Typical warning sign used at sites to mark research stations.

3.5. Water Level Support Poles

Each site will require the installation of a water level support pole. The LDNR/CRD utilizes two methods for deploying continuous recorders that collect water level data. The type of pole that will be established will be determined by the LDNR/CRD.

To ensure proper installation, the following procedures shall be used to achieve acceptance by the LDNR/CRD. Failure to adhere to these procedures may result in an improperly constructed station. The LDNR/CRD reserves the right to accept or reject the final product. If the LDNR/CRD rejects the final product, the person or agency/company installing the station will be required to remove the station and establish it correctly at their expense. These procedures have been used extensively by the LDNR/CRD and are proven to work in all environments.

Treated Wooden Post

The minimum materials needed for this installation process include a 4”x4”x16’ or 20’ treated wooden post, a saw, a widow-maker (a cylindrical steel device that is approximately 36 inches in length, has an inside diameter of greater than or equal to 5.5 inches, and weighs approximately 60 pounds; used for driving post), reflectors, nails/screws (hot dipped galvanize or stainless steel 6d and 16d or 20d), level, hammer, and screwdrivers.

1. A point shall be cut on one end of the timber post to facilitate the installation process.
2. Transport all the materials and necessary equipment via the water vessel to the site.
3. Position and anchor the boat at the location where the post will be established.
4. Place the timber post in the water with the point down. Slowly lower the post into the water to penetrate the subsurface.
5. Make sure that the post remains plumb in all directions as the post is being installed.
6. Once the post no longer penetrates the substrate by the post’s own weight, then the widow-maker must be placed on the top of the post.
7. Using the widow-maker, pound the post into the substrate until resistance is met. NOTE: Refusal occurs when the post no longer penetrates the substrate after several attempts with the widow-maker.
8. Using a level, the post must be checked for plumb in all directions and approximately 4 feet of the post shall remain above the mean high water level or the marsh surface.
9. If the top of the post was damaged, cut the damaged section off. Make sure to cut the post square. This step is critical for elevation surveying.
10. Drive a single 16 or 20 penny hot-dipped galvanize nail 2/3 of the way into the side of the post. This nail must be driven perpendicular to the post. This nail will serve as a reference for measuring the water level while servicing the instrument.
11. The station must be properly marked using reflectors on three sides. The fourth side will be used to attach the continuous recorder. These reflectors shall be secured with 6d penny hot-dipped galvanized nails or screws.
12. Once completed the station shall resemble figure 8.

Document the following information in a field notebook or on the “Continuous Recorder Water Level Sensor Data Sheet“ (Appendix A, Form 4), length of post, length of post below the sediment surface, length of post above the water surface, distance from the sediment surface to the water surface, nail to top of post, nail to water surface, and nail to sediment surface.

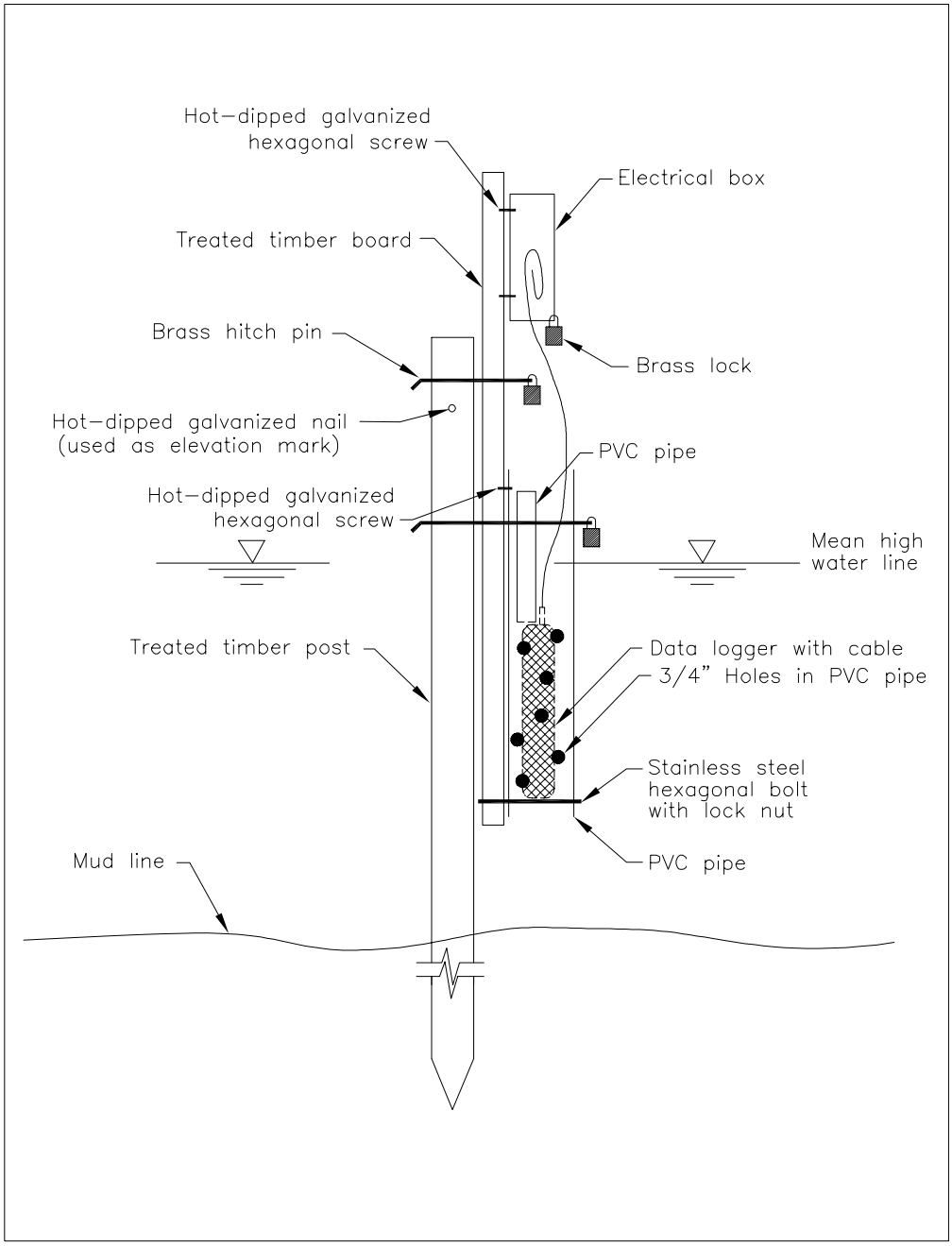

Figure 8: Typical wooden post station.

Stainless Steel Mono-pole

The mono-pole was designed for areas of high energy or with large water vessel traffic that required more strength than the wooden post. The use of this mono-pole system requires the fabrication of metal to construct the pole. Figure 9 shows the materials and the design specifications. To install the pole, the use of a vibracore works the best since using a widow-maker destroys the end of the pole. However, a widow-maker may be used, if precautions are taken to prevent damage to the end of the pipe.

The mono-pole is constructed in advance of the deployment field trip. The following steps provide a methodology for an acceptable installation process for the mono-pole.

1. Transport the mono-pole and all the necessary equipment needed for the installation process via the water vessel to the site.
2. Position and anchor the water vessel where the mono-pole will be deployed and in a manner that allows for a solid, stable work environment.
3. Obtain the depth of the water at the installation location. (This provides an estimate of how much of the pipe will be above the water and provides an estimate of when the plate will rest on the bottom.)
4. Place the mono-pole over the side of the water vessel in a plumb position.
5. Using the vibracore, vibrate the mono-pole to resistance or until the load plate rests on the bottom of the water body. (If resistance is met before the load plate rests on the bottom, then a widow-maker should be used to try and get the mono-pole deeper into the substrate.)
6. Using a level, verify the mono-pole is plumb.
7. If the top of the pipe was damaged during installation, the pipe shall be cut just below the damaged portion. A ¾" hole shall be drilled through the pipe at the top to secure the cap with a hitch pin and a ¼" hole shall be drilled for the elevation mark.
8. Take the following measurements and document in the field notebook or on the "Continuous Recorder Water Level Sensor Data Sheet" (Appendix A, Form 4).
    a. Total pole length
    b. Distance from the bottom of the pole to the load plate
    c. Distance from the load plate to the Top of Casing
    d. Distance from load plate to the continuous recorder stop plate
    e. Water depth
    f. Penetration depth
    g. Mud line to load plate (if not resting on bottom of water body)
    h. Load plate to water surface
    i. Amount of casing removed (if damage was done during installation)
9. Using the brass pin and lock, secure the cap to the pipe.
10. Attach reflective tape to the pipe.

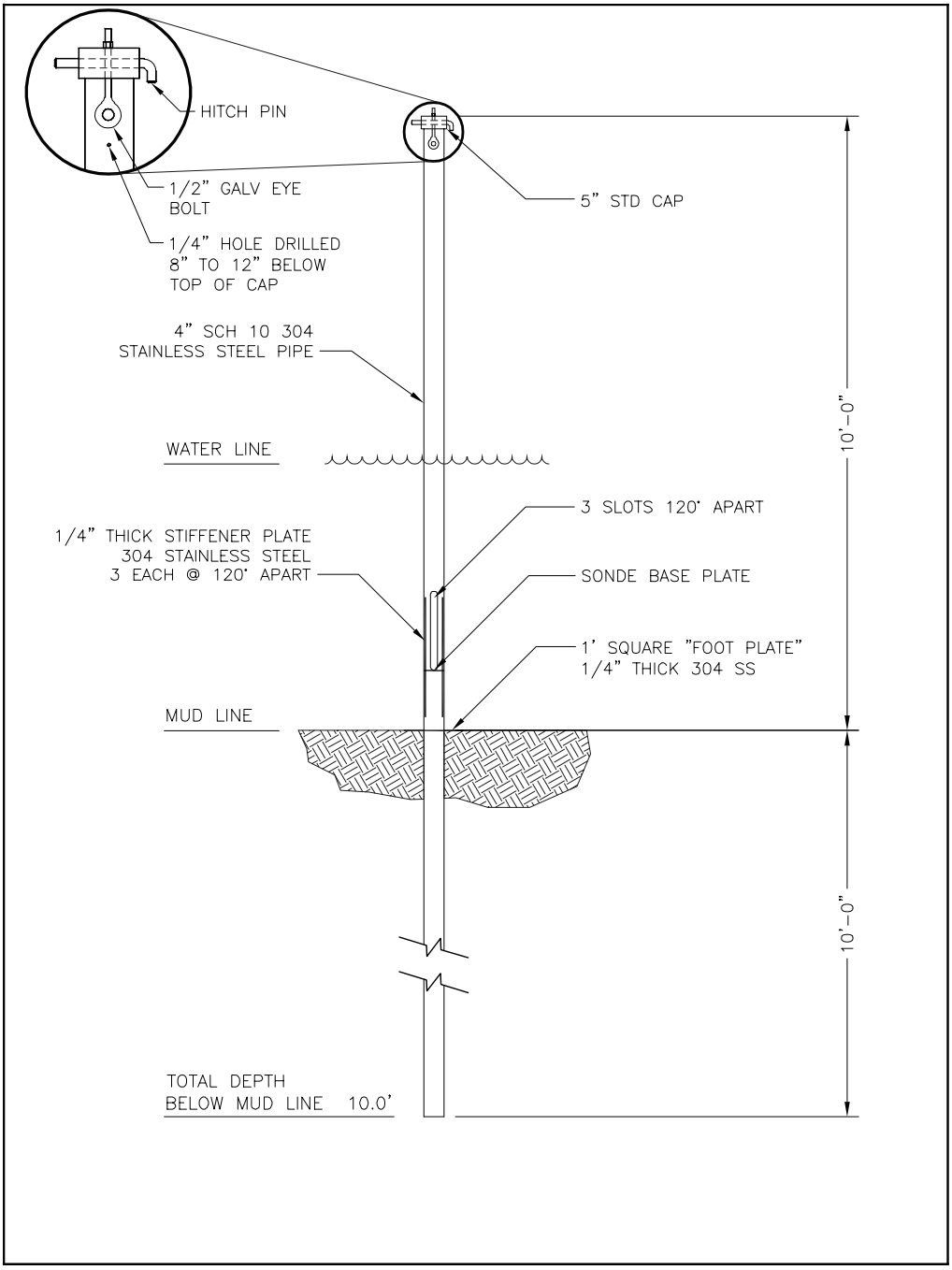

Figure 9: Typical construction diagram of a stainless steel mono-pole.

Marsh Well

The marsh well method will be utilized at sites where there are no adequate water bodies where a continuous recorder would not be constantly submerged during low water events, or where the site may be entirely marsh or swamp (see decision making tree, Figure 2).

The marsh well station will consist of a two board system (Figure 10) that will be established adjacent to the boardwalk in a predetermined location (Figures 3 and 4). One board will be driven to resistance while the other does not have to be driven to resistance.

The minimum materials and equipment needed for station establishment include:

1. Two (2) 2”x4”x8’ treated boards
2. Four (4) 1/4”x1-3/4” hot-dipped galvanized lag screws
3. One (1) electrical box
4. One (1) 2” Schedule 40 PVC well (Figure 10A)
5. One (1) 1” Schedule 40, a 6 inch brass hitch pin
6. One (1)16 penny hot-dipped galvanized nail
7. Two (2) LDNR/CRD issued brass locks
8. A widow-maker
9. PVC cutters
10. Drill and bits
11. Hammer
12. A 2” Schedule 40 PVC pipe with cap approximately 4 feet in length is necessary for installation

The following procedure establishes an acceptable station for the marsh well method for collecting continuous surface water level data.

1. From the boardwalk, determine the correct location for the marsh well according to the approved ‘Preliminary Site Visit’ packet.
2. Using a 2”x4”x8’ (or longer depending on the soil characteristics), drive the board to resistance using a widow-maker making sure the board remains plumb. Enough board must remain above the surface to provide a stable surface to attach the PVC well. NOTE: The board should not extend higher than needed as elevation will be brought to this board. Therefore, the board needs to remain stationary.
3. Take the 2” PVC pipe with cap and drive it into the surface of the soil adjacent to the board to enable the well to be placed into the hole while minimizing the clogging of the screen.
4. Remove the 2” PVC pipe with cap.
5. Place the 2” Schedule 40 PVC with slits (screen) into the hole. The top 2” section of slots shall remain above the surface of the marsh or swamp as illustrated in Figure 10.

6. Secure the PVC well to the board using two (2) 1/4”x1-3/4” lag screws approximately 3” and 18” from the top. NOTE: A ¾” hole will have to be drilled on one side to facilitate access for securing the screw. See figures 10 and 10A.
7. If a continuous recorder is being deployed, place the instrument into the well. Then place the ¾” PVC pipe in the well to secure the instrument.
8. Drill a ¾” hole through the board and the PVC pipe above the well to facilitate the hitch pin.
9. Remove any excess above the hole from the PVC pipe. Only a few inches should remain above the hole.
10. Drive the nail into the side of the board three-quarters of the way into the board to serve as the survey mark.
11. Drive the other 2”x4” board into the marsh/swamp surface a maximum of two feet away from the well portion of the station. It should be easily reached from the boardwalk. NOTE: This board does not have to be driven to resistance. It only has to be stable enough to house the electrical box with the cable, but it must be high enough not to allow water to enter the box during high water events.
12. Mount the electrical box to the board using the 1/4”x1-3/4” lag screws. The box should be a minimum 4 feet above the surface.
13. Upon completion of construction the station shall resemble Figure 10.

Properly constructing this station will allow for the collection of surface water elevation which will be used to calculate the depth and duration of flooding of the marsh / swamp surface.

Document the following information in a field notebook or on the “Continuous Recorder Water Level Sensor Data Sheet“ (Appendix A, Form 4), length of post, length of post below the sediment surface, length of post above the water surface, distance from the sediment surface to the water surface, nail to top of post, nail to water surface, and nail to sediment surface. Since the data sheet is not specifically designed for a well system, use the wooden post column noting that it is a well station.

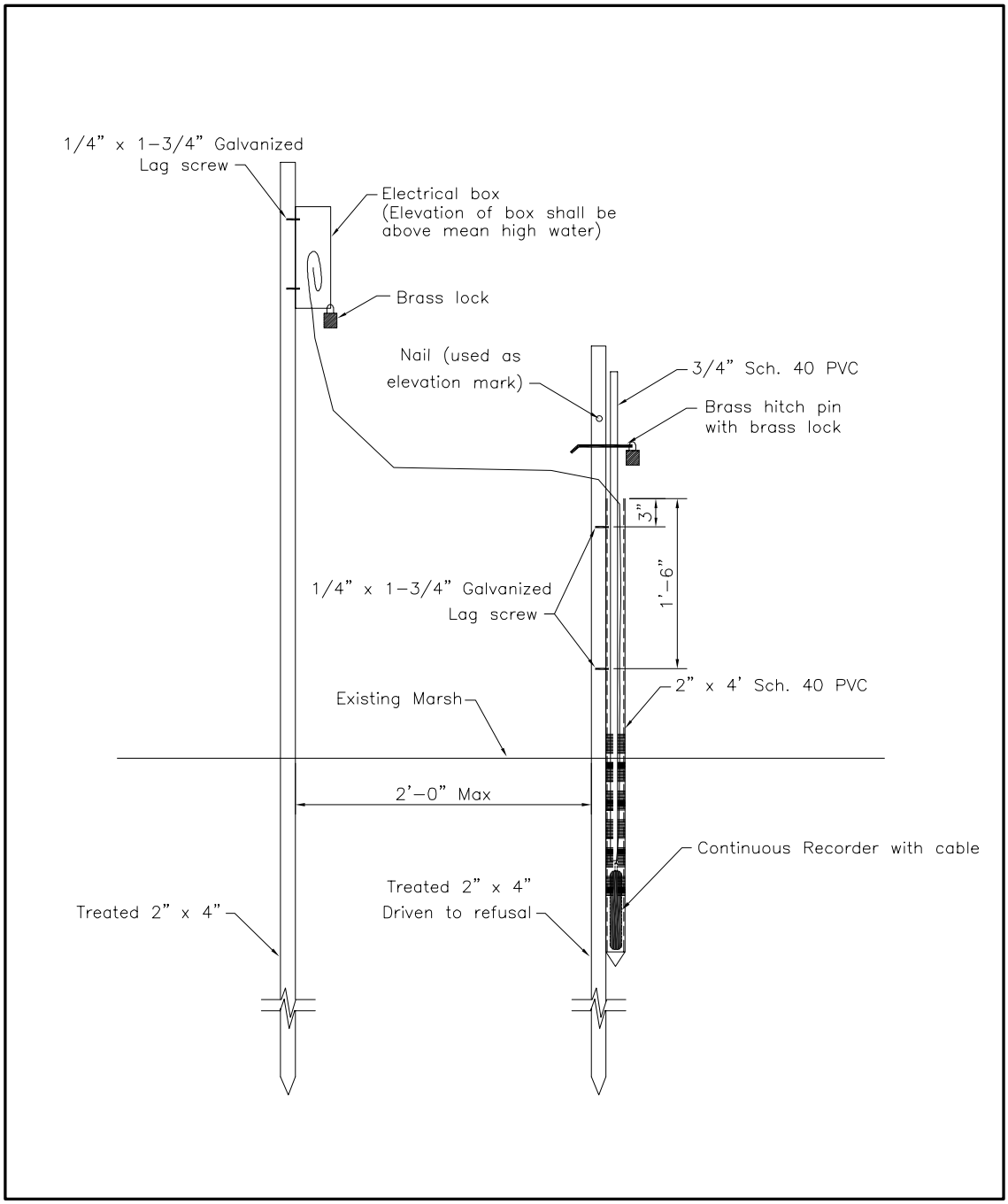

Figure 10: Typical schematic of a marsh well station.

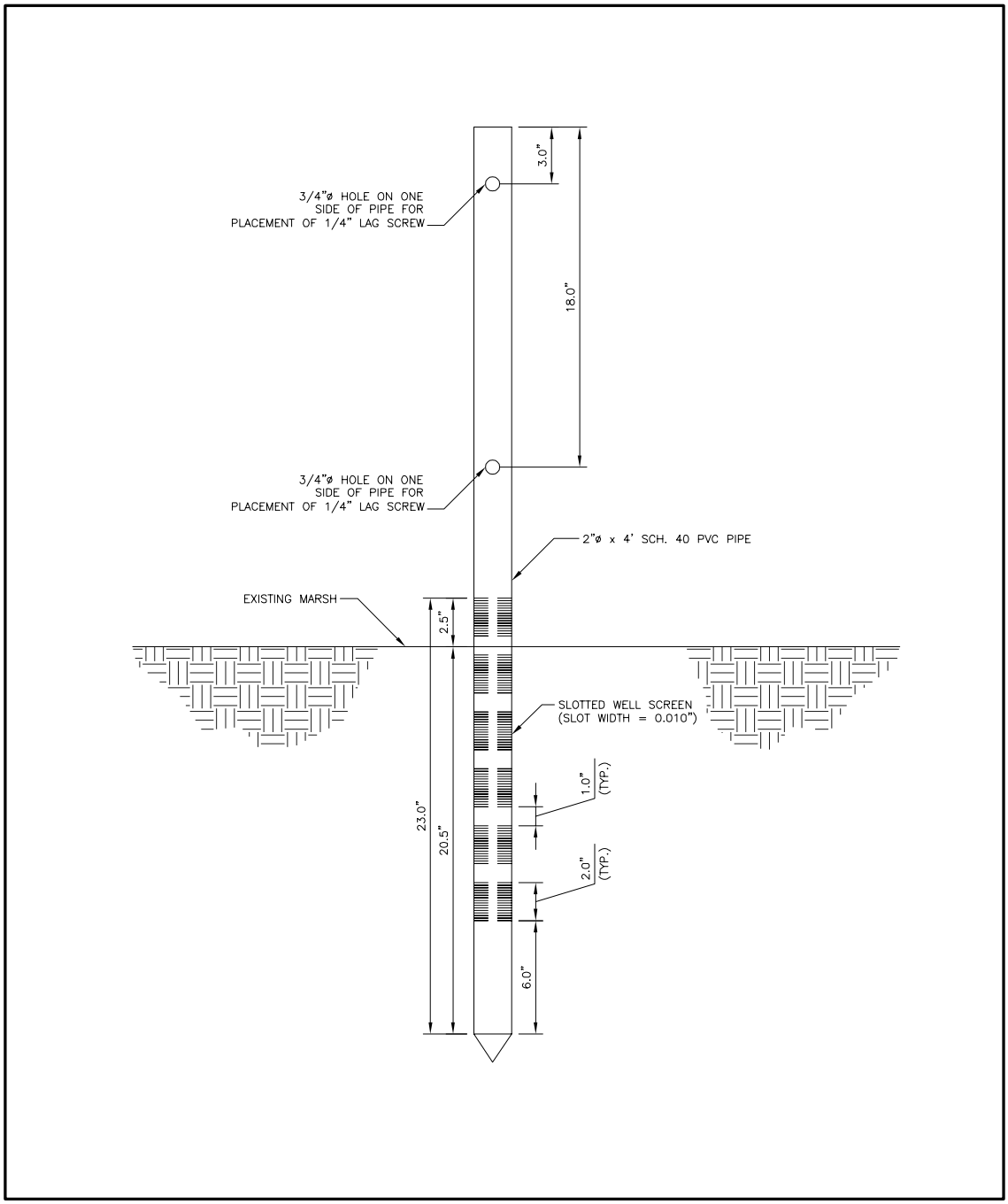

Figure 10A: Detail drawing of the actual well where the continuous recorder will be placed.

3.6. Staff Gauge

A ceramic coated staff gauge (2.5 inches wide ranging from -2 to +3 feet, graduated to hundredths, marked at every foot and every tenth, and 4 grommet holes for fastening with number 8 round headed screws) will be established at sites specified by the LDNR/CRD. The staff gauge will be mounted to a 2"x4"x6' treated board. The board is attached to a 2" galvanized pipe that is driven to resistance (Figure 11). The staff gauge will be set to the vertical datum NAVD 88, Feet during the surveying procedure. A completed drawing is found in Figure 11.

During the construction phase of the site, a 2" galvanized pipe is driven to resistance in a body of water. If a site uses the marsh well method for collecting surface water elevation, the staff gauge may be established in a small pond, if available, in the vicinity of the continuous recorder.

The minimum materials needed for the installation include several pieces of 4 or 5 foot long 2" galvanized pipe threaded on each end, several couplings, a 2" galvanized cap, two pipe wrenches, and a widow-maker. The procedures for installing the pipe to resistance are as follows:

1. Connect two or more pieces of the pipe using the couplings and tighten with the wrenches.
2. Place the pipe in the water at the desired location and drive the pipe into the substrate using the person's weight making sure the pipe remains plumb by using a level.
3. Continue to add sections of pipe as needed and tightening with the wrenches.
4. Once resistance has been achieved, loosely thread the 2" galvanized cap on the pipe. The cap is used to prevent damage to the threads while using the widow-maker.
5. Using the widow-maker, drive the pipe until refusal is accomplished.
6. Continue to add pieces of pipe by removing the cap and using the couplings. Remember to add the cap before continuing with the widow-maker.
7. The process is complete when the pipe has met refusal and a minimum of 4 feet remains above the marsh surface.
8. Tighten the cap onto the end of the pipe.

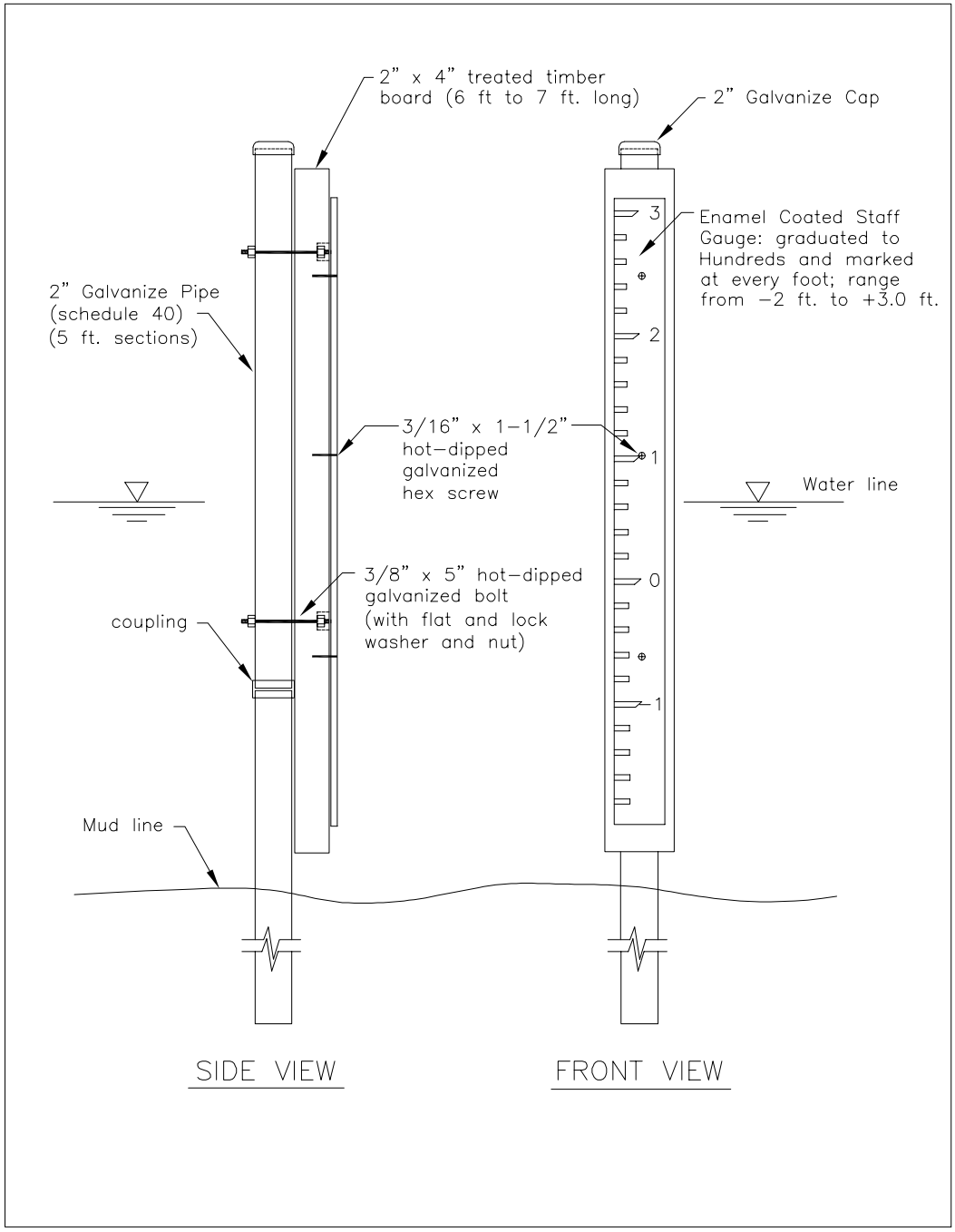

Figure 11: Typical construction diagram for a staff gauge installation.

3.7. Soil Porewater

Soil porewater wells shall be installed on the inside of the first segment of the base boardwalk in attached marshes (Figure 3) or on the right side of the first segment of the base boardwalk in flotant marshes (Figure 4). All wells will be attached to a wooden frame for support (Figure 12).

Materials List

1. Two (2) 2”x4”x~6’ treated boards (or equivalent)
2. One (1) 2”x6”x4.5’ treated board
3. Four (4): 3/8”x4” hot-dipped galvanized or equivalent carriage bolts with hot-dipped galvanized or equivalent flat washers, locking washers, and nuts.
4. Six (6) hot-dipped galvanized or equivalent U-bolts with 2” opening
5. Three (3) 1 1/2" I.D. porewater wells with 1” slotted porewater screen, fitted with a PVC well point to measure porewater at a depth of 10 cm
    a. 1 1/2” Inside Diameter
    b. 1” slotted screen: no. 10 (0.010” width)
    c. 30” unslotted length
    d. 31” total length
6. Three (3) 1 1/2” I.D. porewater wells with 1” slotted porewater screen, fitted with a PVC well point to measure porewater at a depth of 30 cm
    a. 1 1/2” Inside Diameter
    b. 1” slotted screen: no. 10 (0.010” width)
    c. 36” unslotted length
    d. 37” total length
7. Six (6) 4-6” pieces 2”, schedule 40 PVC
8. Six (6) 2” PVC caps
9. PVC glue
10. Six (6) hot-dipped galvanized or stainless steel 2.5 – 3” nails
11. Drill and bits (1/16”, 1/2”)
12. Six (6) wire lock pins (3/8” with 2 1/2” opening)
13. Bentonite (approximately 0.8 gallons per sight)

Construction of Soil PVC Porewater Wells

This section describes the actual construction of the PVC portion of the soil porewater well.

1. The six (6) porewater wells (10 cm and 30 cm) shall be obtained or constructed to the specifications given in Figures 12 and 12A.
    a. Wells shall be constructed from schedule 40, 1 1/2” nominal PVC
    b. Wells shall be fitted with pointed schedule 40 PVC well points
    c. Two (2) 1/16” vent holes shall be drilled on opposite sides of each other approximately 9-12” from the top of the well

   d. For the well screen, 5-8 slots 0.010” wide are cut at the bottom of the well just above the well point (and any portion of the well point that extends inside the well). Each slot is approximately 0.5” to 0.8”. long. The slotted screen shall not exceed 1 in. in length along the vertical length of the well. Four (4) to six (6) different 1 in. tall slotted screen sets shall be located at opposite portions along the circumference of the well.
   e. The 30-cm well shall have a 36”. unslotted length while the 10-cm well will have a 30”. unslotted length. The difference in lengths makes up for the differing porewater sample depths but still allows for staggering of the wells to demarcate the different depths.
2. The well caps are constructed by using PVC cement to attach the 2” PVC cap to a piece of 2” PVC.
   a. Drill a hole through both the well cap and the top of the porewater well such that they can be connected with a wire lock pin
   b. Well caps protect wells from contamination and rainfall. The 2” I.D. PVC will fit easily over the top of the well. Use appropriate length for the well cap to maintain stability (i.e., 4-6”).
   c. Caps need to be attached loosely enough that they can be removed without jostling the porewater well.
3. From the approximate middle of the porewater holes, measure and mark a 10 or 30 cm line (depending on the original cut).

This section provides the field installation protocol for the soil porewater wells:

1. Sharpen one end of both of the 2”x4” boards.
2. Fasten the square end of the 2”x4” boards to the 2”x6” board using the four (4) 3/8”x4” bolts (two on each side) with the washers and nuts by drilling holes through both boards.
3. Drive the frame into the surface of the marsh/swamp near the boardwalk at the location determined and approved during the ‘Preliminary Site Visit’ review. The frame shall be driven approximately 4 feet into the surface or until stable.
4. Fasten the PVC soil porewater wells onto the 2”x6” board according to Figure 12. <u>NOTE: Using an extra well to form the holes may reduce the clogging of the screen when installing the well.</u>
5. Two inches of surface material shall be removed around the wells and replaced with bentonite. This prevents any surface water from traveling along the well to into the soil.
6. Place the soil porewater caps on the wells and secure using the wire lock pins.

The final constructed unit shall resemble figure 12 and each individual well shall resemble figure 12A.

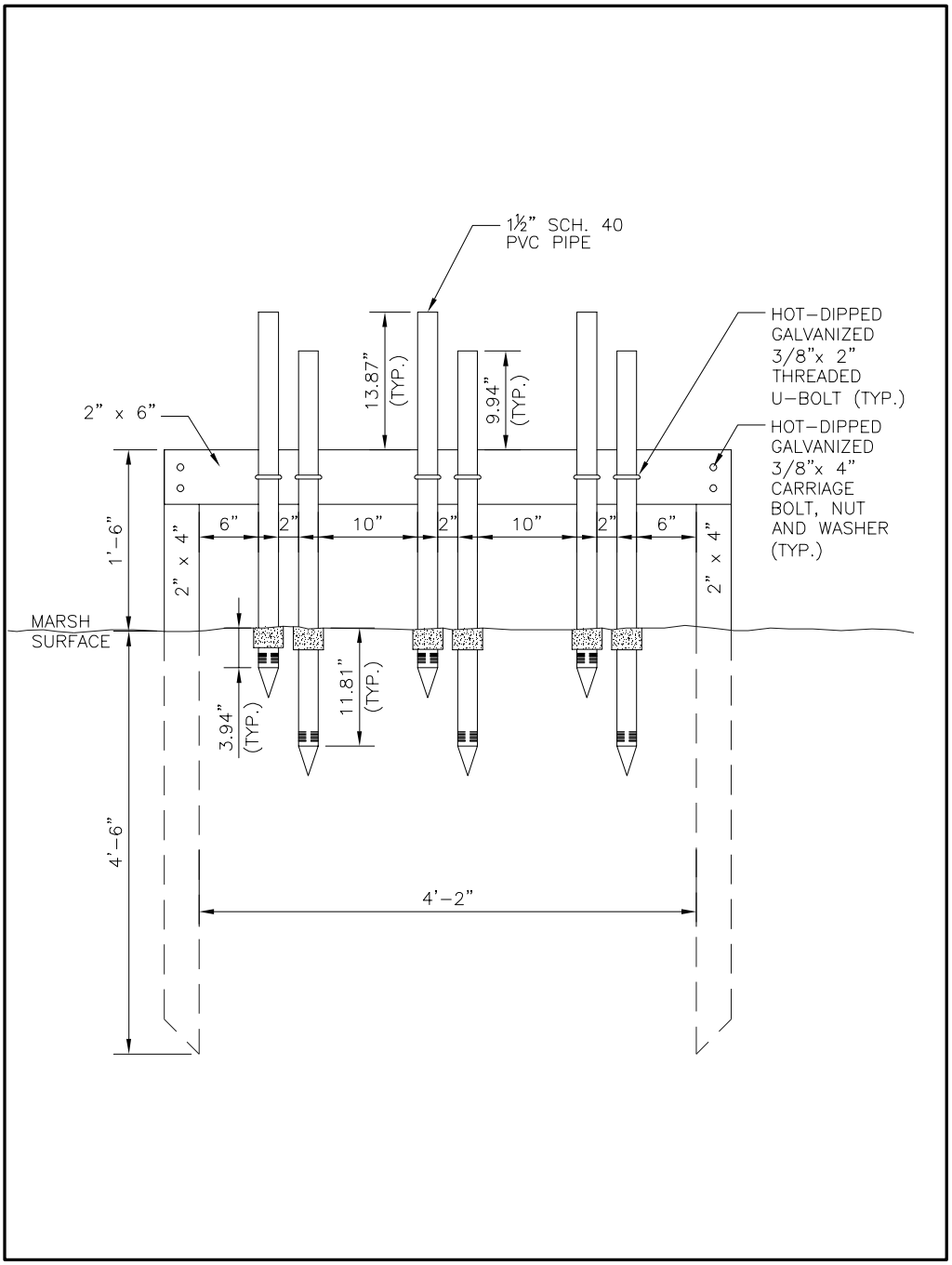

Figure 12: Typical soil pore water well construction layout.

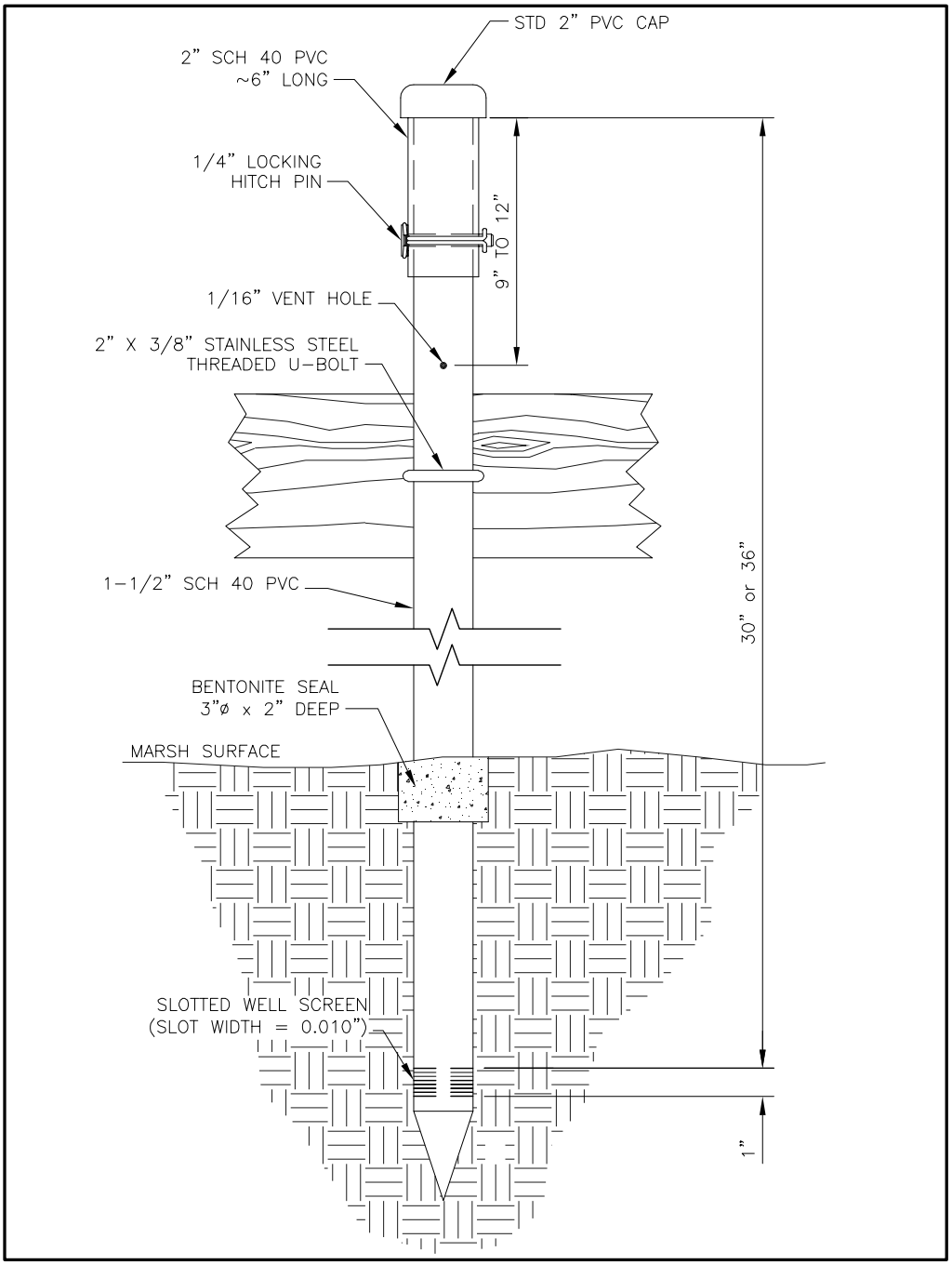

Figure 12A: Detailed drawing of an individual soil pore water well construction.

3.8. Static Floating Marshmat System

During the construction phase, those sites that have been determined to be floating and will utilize a static floating marshmat recording system require a 3" aluminum pipe to be installed. This data collection station requires the establishment of an elevation point that is tied into the LDNR/CRD secondary benchmark network system.

The following materials and equipment will be needed to establish the aluminum pipe:

1. One (1) 3" aluminum pipe approximately 20 ft in length
2. 3" cap for the pipe
3. 3" coring device
4. Widow-maker
5. Drill and ¼" bit
6. Hack saw
7. Level

The following are recommended procedures for the establishment of the station.

1. From the boardwalk, cut a hole in the marsh mat the size of the post using a soil auger or coring tube. This hole shall be on the right side of the boardwalk and in the middle section of the base boardwalk (Figure 4).
2. Place the post in the hole. NOTE: The post shall be open on both ends. The post shall remain high enough above the marsh surface such that the counter weight does not rest upon anything in the tube during deployment or servicing. If the counter-weight touches anything inside the post it may adversely affect the readings.
3. Using a person's weight drive the post into the underlying substrate as deep as possible while maintaining plumb.
4. Using a widow-maker or similar device, drive the post into the substrate until resistance is met. NOTE: A protective cap or covering shall be used on the post to prevent any damages from the pounding. If any damage has occurred during the installation process, cut the damaged portion off squarely so that the platform will rest perpendicular on the post.
5. Once the post is secured and remains a minimum of four feet above the boardwalk, drill a ¼" hole in the pipe closes to the boardwalk approximately 8-10" from the top. This hole will serve as an elevation mark for the instrument.

The pipe is now ready for the attachment of the housing unit that will contain the continuous recorder and pulley and is also ready for the surveyor to provide an elevation of the ¼" hole. Chapter 6.2 provides the necessary information to attach the housing to the pipe.

3.9. Elevation

Elevations will be collected and established at all the LDNR/CRD sites. All elevations will be surveyed using the vertical datum NAVD 88, Feet. Elevations shall be obtained using real-time kinematic (RTK) surveying technology. This technology utilizes satellites and benchmarks that have known elevations. The LDNR/CRD has developed a secondary benchmark network throughout the coastal zone. These benchmarks have been or will be established according to the methods described in the manual "A Contractor's Guide to Minimum Standards" dated June 2003. The LDNR/CRD will only accept surveys that utilize accepted benchmarks. Elevations will be established on the continuous recorder, the static floating marsh system (if it exists), and the rod for the RSET stations. Staff gauges will be established to the same vertical datum. Marsh elevations will be collected at a minimum of twenty (20) points in the vicinity of the boardwalk (outside the 10 m buffer around the boardwalk). More information concerning the LDNR/CRD protocols and data deliverables for surveying are found in chapter 12.

Continuous Recorder

For both the wooden post and the stainless steel post the following points require an elevation survey. The 4"x4" post has an existing "nail" in the side and this "mark" requires surveying. The stainless steel poles will utilize the top of the ¼" hole (approximately 12 inches from the top of the cap) in the pipe as the "mark" that requires surveying. Once an elevation is achieved at the station, sufficient measurements shall be obtained to complete the spreadsheet *Continuous recorders and staff gauge format for surveyor.xls* (Appendix A, Form 3) as well as produce a standard data sheet (Appendix A, Form 5).

Staff Gauge

Using section J.6 of "A Contractor's Guide to Minimum Standards," install the staff gauge onto the galvanized pipe. The manual is written to establish a staff gauge onto a wooden post; however, the LDNR/CRD requires staff gauges to be mounted to a 2" galvanized pipe (Figure 11). Consequently, the technique will be a variation of the manual. Staff gauges shall consist of a 2.5" x 3.3' porcelain enamel coated metal gauge.

Obtain an elevation of the top of the pipe and decide where the top of the staff gauge will be placed. Secure a 2"x4" treated timber to the post using a minimum of two hot-dipped galvanized bolts in a manner that allows approximately 6 inches of the board to remain above the staff gauge. Using the method in section J.6 of the manual, mount a staff gauge to the 2"x4" timber with no less than 3, No. 8 round head hot dipped galvanized screws in the existing holes (NO DRILLING THROUGH THE ENAMEL OF THE STAFF GAGE WILL BE ACCEPTED).

Upon completion of the installation, obtain all the measurements that will complete the spreadsheet *Continuous recorders and staff gauge format for surveyor.xls* (Appendix A, Form 3). By completing this table, it verifies that the staff gauge and the nail elevation are within the accuracy of the instrument. The difference between the water elevation reading with respect to the nail elevation and the staff gauge shall be within 0.05 feet of each other. If these readings are not within this range, elevations must be obtained and adjustments be made until it is within the acceptable range. Also, a staff gauge data sheet shall be produced (Appendix A, Form 6).

Static Floating Marsh Mat Recorder System

In order to convert the data obtained from this instrument to a vertical datum, a ¼" hole has been drilled within the top twelve inches of the pipe. The elevation of the top of the hole shall be determined by RTK surveying methods. A static floating marsh mat recorder system data sheet similar to the continuous recorder data sheet (Appendix A, Form 5) shall be produced.

RSET

All RSET stations will be surveyed to a known elevation (NAVD 88, Feet) at the top of the 9/16" stainless steel rod. The LDNR/CRD will identify which primary or secondary monument to use for the RTK survey. This elevation will be used during the sampling period to determine elevation changes of the marsh / swamp surface. An RSET data sheet similar to the continuous recorder data sheet (Appendix A, Form 5) shall be produced.

Marsh Surface

Marsh elevation shall be determined outside of the 10 m (32.8 ft.) boardwalk buffer at a minimum of 20 points in attached marshes/swamps. Those areas that are classified as floating marshes shall not be surveyed due the vertical movement of the marsh. Due to each site's uniqueness with respect to the placement of each data collection station, a definitive protocol for surveying the marsh surface will not be attempted. In general, marsh surface with respect to elevation surveys is defined as "when the survey rod is resting among living stems or is supported by soil containing living roots." In order to get a consistent reading, often times it will be necessary to move stems in some marsh vegetation where stem density is extremely high. A minimum of twenty (20) elevations recorded in relation to NAVD 88, Feet (each one separated by 20 ft. to 40 ft.) are needed for this determination. The twenty (20) elevations are averaged to obtain marsh elevation. All 20 readings and the average shall be provided in an Excel spreadsheet that was identical to the format presented in Appendix B, Format 11. The Excel spreadsheet is available through the LDNR/CRD.

When the dominant species is *Spartina patens* (saltmeadow cordgrass), a minimum of forty (40) elevations will be recorded. Twenty (20) elevations will be recorded on the marsh surface and twenty (20) elevations will be recorded on the crown of the

Spartina patens that is adjacent to the marsh surface reading. These readings shall be saved and provided to the LDNR/CRD such that a differentiation can be made between the two readings. The average marsh elevation will be obtained by averaging the forty (40) points; however, these readings may need to be separated at a later date.

Prior to obtaining marsh elevation readings, the following information shall be recorded in a field journal: station number, date and time of survey, staff gauge reading or water elevation, and marsh flooding. Marsh flooding is determined by the question: is surface water above the marsh surface? If yes, then document the average water depth over the marsh surface.

Once the survey at each station is completed, the surveyor shall record what type of terrain was encountered during the survey. This should include whether the marsh was firm and easy to traverse, spongy with minimal difficulty, or very soft with extreme difficulty and falling through the marsh.

Marsh elevations shall be taken where there is no influence of spoil banks, levees, or any other human induced alterations. Moreover, these elevations shall represent the surrounding marshes.

3.10. Deliverables

A report and data files containing:

Sampling Platform Construction

1. Documentation of the date of construction.
2. Documentation of any problems or concerns with the construction.
3. Diagram of the actual length, layout of the boardwalks with distances and bearing, and DGPS coordinates of the access point of the boardwalk.
4. Digital pictures of the site before and after construction. Each picture must have a date stamp. Digital pictures must be in a JPEG format and each picture must be named with the site name, description, sequence number, and date (CRMS0397_BoardwalkConstruction_1_March2005.jpg).

RSET

1. Documentation of the date of construction.
2. Documentation of any problems or concerns with the installation.
3. The number of rods used for installation, the total length of the monument, and the distance from the top of the rod to the top of the collar.
4. Digital pictures of the site before and after construction. Each picture must have a date stamp. Digital pictures must be in a JPEG format and each picture must be named with the site name, description, sequence number, and date (CRMS0397_RSET_Installation_1_March2005.jpg).

5. Monument datasheet after station is surveyed. Datasheet shall follow the example in the manual "A Contractor's Guide To Minimum Standards" in section I.4.
6. Field notes shall resemble the example in section I.5 of "A Contractor's Guide To Minimum Standards".
7. Station information shall be recorded in the Excel files provided by LDNR that contain station coordinates (CoordsTemplete.xls) and station data collection information and frequency (MonstatTemplete.xls).

Warning Signage

1. Documentation of the date of installation.
2. Documentation of any problems or concerns with the installation.
3. Digital pictures of the site before and after construction. Each picture must have a date stamp. Digital pictures must be in a JPEG format and each picture must be named with the site name, description, sequence number, and date (CRMS0397_WarningSign_Installation_1_March2005.jpg).
4. DGPS coordinates in (UTM, NAD83 Meters) of the location.

Water Level Support Poles

1. Documentation of the date of installation.
2. Documentation of any problems or concerns with the installation.
3. Documentation of measurements from field notebook or Appendix A, Form 4.
4. Digital pictures of the site before and after construction. Each picture must have a date stamp. Digital pictures must be in a JPEG format and each picture must be named with the site name, description, sequence number, and date (CRMS0397_WaterLevelPole_Installation_1_March2005.jpg).
5. DGPS coordinates shall be recorded in the 'CoordsTemplete.xls' file in (UTM, NAD83 Meters). Station data collection information and frequency shall be recorded in the 'MonstatTemplete.xls' file.

Staff Gauge

1. Documentation of the date of installation.
2. Documentation of any problems or concerns with the installation.
3. Documentation of the number of pipes used for the installation, the total length of the pipe, and the depth of penetration.
4. Digital pictures of the site before and after construction. Each picture must have a date stamp. Digital pictures must be in a JPEG format and each picture must be named with the site name, description, sequence number, and date (CRMS0397_StaffGauge_Installation_1_March2005.jpg).
5. DGPS coordinates shall be recorded in the 'CoordsTemplete.xls' file in (UTM, NAD83 Meters). Station data collection information and frequency shall be recorded in the 'MonstatTemplete.xls' file.

Soil Porewater

1. Documentation of the date of installation.
2. Documentation of any problems or concerns with the installation.

3. Documentation of the amount of bentonite used at the station.
4. Digital pictures of the site before and after construction. Each picture must have a date stamp. Digital pictures must be in a JPEG format and each picture must be named with the site name, description, sequence number, and date (CRMS0397_Soil Pore Water_Installation_1_March2005.jpg).
5. DGPS coordinates shall be recorded in the 'CoordsTemplete.xls' file in (UTM, NAD83 Meters). Station data collection information and frequency shall be recorded in the 'MonstatTemplete.xls' file.

Static Floating Marshmat System

1. Documentation of the date of installation.
2. Documentation of any problems or concerns with the installation.
3. Documentation of measurements from field notebook.
4. Digital pictures of the site before and after construction. Each picture must have a date stamp. Digital pictures must be in a JPEG format and each picture must be named with the site name, description, sequence number, and date (CRMS0397_Static Marshmat System_Installation_1_March2005.jpg).
5. DGPS coordinates shall be recorded in the 'CoordsTemplete.xls' file in (UTM, NAD83 Meters). Station data collection information and frequency shall be recorded in the 'MonstatTemplete.xls' file.

Elevation

1. Marsh Elevations
   a. An Excel spreadsheet with the point number, northing and easting coordinates (UTM, NAD83 Meters), and the elevation (NAVD88, Feet). The LDNR/CRD shall provide a template of the spreadsheet which is identical to format 11 of Appendix B.
   b. Field notes with the required information: date and time of survey, station number, staff gauge reading at time of survey, water level in relation to marsh surface, and description of difficulty doing the survey.
2. Water Level Support Poles
   a. Field notes that contain: a diagram of the pole, the distance from the top of pole to "Mark Elevation", the water elevation, distance from nail to water surface, and all necessary measurements to complete the 'Continuous Recorder Water Level Sensor Data Sheet' (Appendix A, Form 4).
   b. The Excel spreadsheet *Continuous recorders and staff gauge format for surveyor.xls* (Appendix A, Form 3*)* completed.
   c. Coordinates (UTM, NAD83 Meters) of the station.
   d. Continuous Recorder Survey Data Sheet (Appendix A, Form 5)
3. Staff Gauge
   a. Field notes that contain: a diagram of the staff gauge after it has been mounted, the elevation of the top of the pole, the distance from the top of the pole to the water at the time of establishment, and the distance between the top of the pole and the 3' mark on the staff gauge.
   b. The Excel spreadsheet *Continuous recorders and staff gauge format for surveyor.xls* (Appendix A, Form 3) completed.

   c. Coordinates (UTM, NAD83 Meters) of the station.
   d. Continuous Staff Gauge Survey Data Sheet (Appendix A, Form 6)

4. Static Floating Marsh Mat Recorder
   a. Field notes that contain: a diagram of the static floating marsh mat recorder station, the distance from the top of the pole to the top of the ¼" hole, the distance from the top of the pole to the marsh surface, and the elevation of the top of the 1/4" hole.
   b. Coordinates (UTM, NAD83 Meters) of the station.
   c. Continuous Recorder Survey Data Sheet (Appendix A, Form 5)

5. RSET
   a. Field notes that contain: a diagram of the RSET, the distance from the top of the stainless steel rod to the top of the collar, and the elevation of the top of the rod.
   b. Coordinates (UTM, NAD83 Meters) of the station.
   c. Continuous Recorder Survey Data Sheet (Appendix A, Form 5); although this is a continuous recorder example, a data sheet shall be developed for the RSET station that has all the necessary information.

4. SURFACE WATER

High variability in water-level and salt-water intrusion have been shown to cause adverse effects on the health of coastal wetland ecosystems (Gagliano et al. 1981). As a corollary, the LDNR/CRD has included these variables into its monitoring program. Both changes in water level and salinity values will be measured on a continuous basis (defined as hourly, unless otherwise stated by the LDNR/CRD) where water depths remain deep enough to continually submerge the sensors. These variables are measured using a pressure transducer and a salinity meter (Steyer et al. 1995). The LDNR/CRD utilizes the YSI 6920, YSI 600XLM, or equivalent continuous recorder with a vented cable as the basic model that can measure water level via a pressure transducer as well as salinity, specific conductance, and water temperature. Likewise, a YSI 30 or equivalent can measure salinity, specific conductance, and water temperature at discrete locations and to assure the data logger is properly calibrated.

In areas where the marsh/swamp dries periodically or is only inundated for a short period of time, a continuous recorder will be deployed within a PVC pipe system which is very similar to groundwater wells. Utilizing this technique will provide the necessary data with respect to surface water; however, any water level data that is recorded below the marsh surface is considered ground table water elevations. Consequently, this groundwater may not respond the same as water within a pond or other type of water body. Thus, only the water elevation above the marsh will be used for publication purposes.

4.1. Instrumentation

The instrumentation that has been extensively used by the LDNR/CRD is an environmental monitoring instrument that is a multi-parameter, water quality measurement, and data collection system. The instrument is capable of recording and storing water temperature (°C), specific conductance (µS/cm), salinity (ppt), and water level (feet) at specified intervals. The water level sensor shall be a vented level system capable of recording to depths of 9.1 meters (30 feet). The water level sensor must be a vented sensor that has a range of 0 to 9.1 meters (30 feet), a minimum accuracy of ±0.003 meters (0.01 feet) in depths to 3.0 meters (10 feet), and in depths of 3.0 to 9.14 meters (10 to 30 feet) the minimum accuracy must be ±0.018 meters (0.06 feet). Along with the water level sensor specification above, the instrument shall be capable of transferring the raw data through a field display unit or field computer to an Excel spreadsheet for the production of graphs and monthly summary data analysis before the data is imported into the LDNR/CRD's main database. The LDNR/CRD has developed an extensive procedure that shall be followed with respect to the instruments field deployment, servicing, data process, data storage, statistical analysis, and graphic display of analysis.

4.1.1. Types of Continuous Recorder Stations

Due to the topographic variability among all sites in coastal Louisiana, several different procedures for station establishment have been developed to collect data with respect to the surface water conditions. For example, a site that has sufficient yearly levels of water (i.e., water would remain above the water sensor throughout the year) would have a YSI 6920, YSI 600XLM or equivalent continuous recorder to measure hourly water level and salinity values. The LDNR/CRD has approved two methods for deploying continuous recorder instruments for the collection of water quality data. The methods differ in the use of materials and environment in which they are suited. One method consists of a four inch by four inch (4"x4") by twenty (20) foot treated wooden post driven into the substrate of an open water body to refusal. A perforated PVC pipe and electrical box are mounted onto a 2"x4"x10' board which is attached onto the wooden post (Figure 8) via two hitch pins. This method works well in meandering bayous and marsh channels, where the mean depth of water is less than 8 feet, and the velocity of water is low to moderate. The other method is a stainless steel pipe (henceforth called the mono-pole) that has a quarter inch plate welded at a depth such that the plate rests on the bottom for stabilization. The pipe has slits cut out in the water column to facilitate water exchange (Figure 9). This pipe method is suited for all environments; however, it is best used in high velocity or high energy areas such as rivers and large navigational waterways. In determining which method to use, the LDNR/CRD suggests that: 1) In areas with low wave action, wooden post station will be established and 2) In areas with high water velocity, traffic, or wave action, the mono-pole station will be established. Once the wooden post or mono-pole is installed, the same deployment and servicing procedures will be followed.

In areas where there is no sufficient water, i.e., water bodies are to shallow, the area is solid marsh, or in swamps where there are periods of no surface water**,** the method for station establishment is a marsh well. This site will utilize a continuous recorder; however, the entire data set may not be used when analyzing the data particularly when the water level is below the surface of the marsh or swamp.

Wooden Post

Materials List (Minimum)

1. 4"x4"x20' treated timber post or equivalent
2. 2"x4"x10' treated timber board or equivalent
3. 1 – 6" Brass hitch pin
4. 1 – 9" Brass hitch pin
5. 1 – Electrical box (The LDNR/CRD is currently using a Thomas & Betts 125 A Max Type 3R Enclosure; Catalog No. TBL12(4-8)R or Murray Model 21; Catalog No. LW006NR)
6. 3 – ¼"x1¾" hot-dipped galvanized or equivalent hexagonal screws
7. 1 – ¼"x6" or 4½" hot-dipped galvanized or equivalent hexagonal bolt with washer and locking nut (instrument diameter dependent)

8. 3 – Brass locks (All locks keyed the same and provided by the LDNR/CRD)
9. 1 – 2" or 4" schedule 40 PVC perforated pipe with multiple ¾" holes (28" to 36" in length); size depends on the diameter of the continuous recorder
10. 1 – 1½" schedule 40 PVC pipe (≥2' in length)
11. 1 – 16 penny common stainless steel or equivalent exterior nail (used for a vertical reference point)
12. Reflectors (4 minimum)
13. Exterior nails or screws for reflectors
14. YSI 6920, YSI 600XLM, or equivalent continuous recorder data logger

Additional Materials Needed For the Installation Process

1. Widow-maker: a cylindrical steel device that is approximately 36 inches in length, has an inside diameter greater than or equal to 5.5 inches, and weighs approximately 60 pounds; used for driving post
2. Wrenches
3. Cordless drill and bits (minimum ¾" wood bit and various size screw driver adaptors)
4. Saw (Wood and PVC)
5. Hammer
6. Socket set and driver
7. Various size screw drivers
8. Level
9. Measuring device (a surveyors rod capable of measuring feet, tenths and hundredths)
10. Personal protective equipment (minimum of gloves and eye protection)

Installation

The following method shall be used for the installation of a continuous recorder station. The method shall be established as follows:

Verification of site selection

1. The site-specific map, site characterization sheet, and a differential Global Positioning System (DGPS) instrument shall be used to locate the pre-determined site. Once the site has been located, the field personnel must verify that the site has not changed and is sufficient for establishment.
2. This verification shall be done by examining the site and answering the following questions: (1) Is the water level / water body deep enough so that the sensors will be submerged during the lowest water levels? (2) Is the site intrusive of a navigational waterway? (3) Is the pre-determined system of deployment sufficient for the site?
3. By answering the questions in step 2, the field personnel shall verify that the pre-determined set-up is sufficient for the site. If it is determined that the set-up is sufficient, the field personnel shall follow the appropriate steps for installation. <u>NOTE:</u> If the field personnel find the site inappropriate, the LDNR/CRD must be notified before the installation.

Procedures for the Wooden Post

To ensure proper installation, the following procedures shall be followed to achieve acceptance by the LDNR/CRD. Failure to adhere to these procedures may result in an improperly constructed station. The LDNR/CRD reserves the right to accept or reject the final product. If the LDNR/CRD rejects the final product, the station will be removed and established correctly at another location selected by the LDNR/CRD. These procedures have been used extensively by the LDNR/CRD and are proven to work in all environments. To facilitate the proper construction of the station, a schematic is provided in Figure 8.

Prior to arriving at the site, a point shall be cut on one end of the timber post to facilitate the installation process.

1. Transport all the materials and necessary equipment via the water vessel to the site.
2. Position and anchor the boat at the location where the post will be established.
3. Place the timber post in the water with the pointed end down. Slowly lower the post into the water to penetrate the subsurface.
4. Make sure that the post remains plumb in all directions as the post is being installed.
5. Once the post no longer penetrates the substrate by the post's own weight, then the widow-maker must be placed on the top of the post.
6. Using the widow-maker, pound the post into the substrate until refusal is met. NOTE: Refusal occurs when the post no longer penetrates the substrate after 3 attempts.
7. At the end of this procedure, the post must be plumb in all directions and approximately 4 feet of the post shall remain above the mean high water level or the marsh surface.
8. If the top of the post was damaged, cut the damaged section off (making sure the cut is square). This step is critical for determining distances and elevation.
9. The assembly of the 2"x4" board can be done prior to the field installation. The 2"x4" board is assembled by mounting the electrical box to one end of the board and mounting the perforated PVC pipe to the other end of the board. (NOTE: (1) The PVC shall be at least twelve inches longer than the instrument or high enough to extend above the water during normal high tide. This assures that the instrument will remain in place. (2) If the instrument's diameter is greater than 2", then a 4" diameter PVC pipe is needed. If the instrument's diameter is less than 2",then a 2" diameter PVC pipe is needed.) The electrical box is mounted to the board using two ¼"x1¾" hot-dipped galvanized hexagonal screws. The PVC pipe is mounted to the board using a ¼"x1¾" hot-dipped galvanized hexagonal screw at the end closes to the electrical box and a ¼"x4½" or 6" stainless steel hexagonal bolt with washer and locking nut that will serve as a rest for the instrument.

10. Place the assembled 2”x4” board adjacent to the post to determine its position and mark the location of the two holes for the hitch pins.
    a. The bottom of the PVC pipe shall be a minimum of 4” above the mud line.
    b. The electrical box should be high enough to prevent tidal waters from inundating the box during a hurricane, but low enough to reach during servicing.
    c. Holes should be a minimum of 6” from the top of the post and a minimum of 12” from the top hole. The bottom hole should be out of the mean high water range.
11. Drill the two ¾” holes through the post and board.
12. Fasten the board to the post by using the 6” hitch pin in the top hole and the 9” pin in the bottom hole.
13. Place the continuous recorder instrument in the PVC pipe.
14. Take the 1½” PVC pipe and place it on top of the instrument. Make sure the pipe extends a minimum of 4” above the hole for the 9” pin.
15. Drill a hole such that the 9” pin will pass through the 1½” PVC pipe. This assures that the instrument will not move vertically and prevents theft.
16. The cable will be housed in the electrical box by being threaded through the hole on the underneath side.
17. A single 16 penny hot-dipped galvanized nail shall be driven 2/3 of the way into the side of the post. This nail must be driven perpendicular to the post. This nail will serve as a reference for measuring the water level while servicing the instrument. NOTE: If the post was previously installed and has a nail, then DO NOT add another nail. The post shall have only one nail.
18. Document the following measurements on the “Continuous Recorder Water Level Sensor Data Sheet” (Appendix A, Form 4) by referring to Figure 13:
    a. Nail to top of post
    b. Nail to bottom of continuous recorder
    c. Nail to water level sensor
    d. Nail to water line
    e. Nail to substrate
    f. Water depth
    g. Penetration depth
    h. Total length of pole

    NOTE: The measurements must be transferred to the Excel “Site History” file provided by LDNR/CRD.
19. The station must be properly marked using reflectors on all four sides. These reflectors shall be secured with the exterior screws or nails.
20. The instrument can now be deployed for continuous readings.
21. Secure the site with the three brass locks on the two hitch pins and the electrical box.

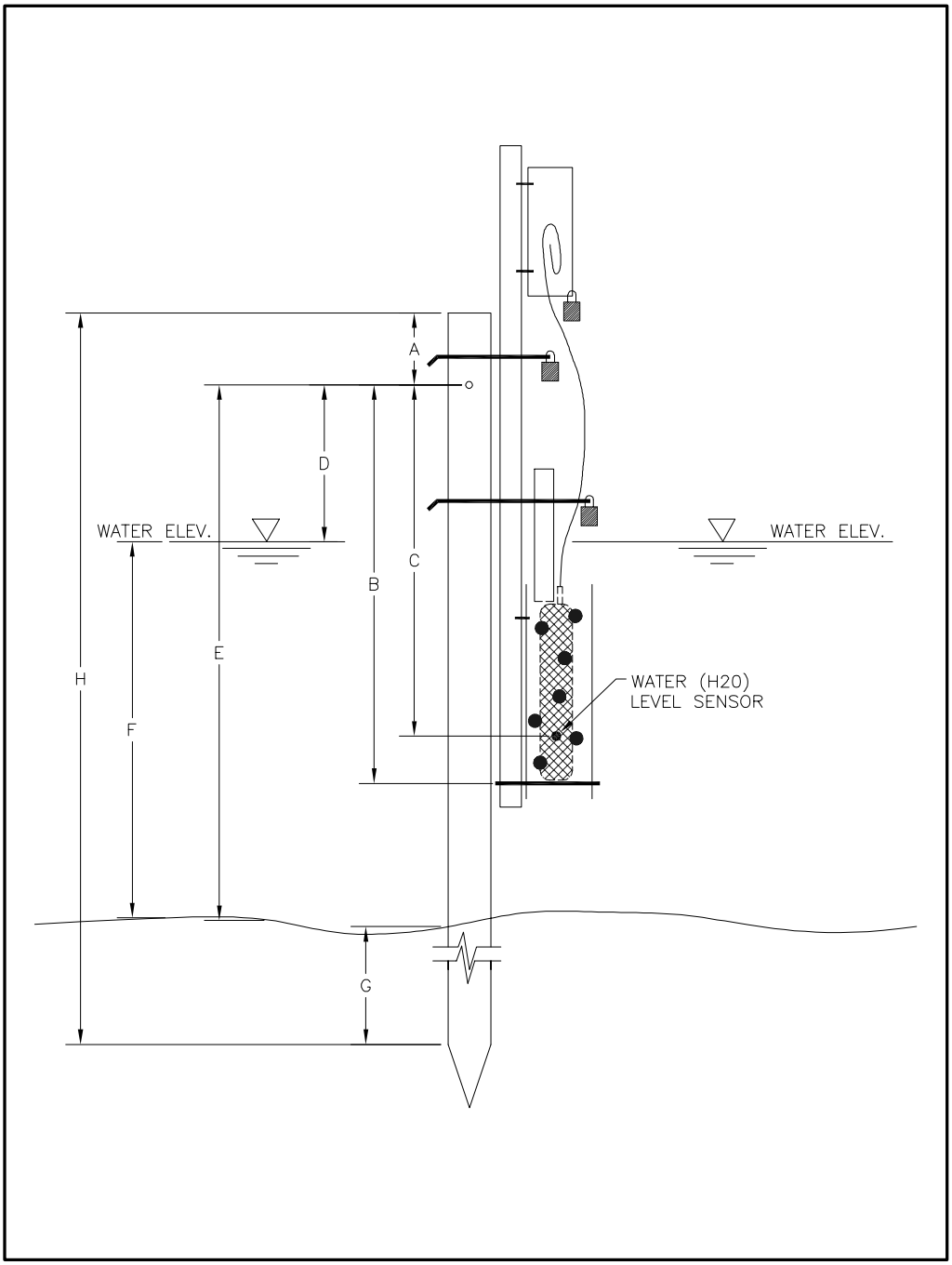

Figure 13: Schematic of distances needed to be measured for elevation calculations for the wooden post continuous recorder setup.

Mono-pole

Materials List (Minimum)

1. 1 – 4”x 20’ schedule 10 304 Stainless steel pipe
2. 1 – 5” standard cap
3. 1 – ¼”x1 square foot 304 stainless steel plate
4. 1 – 6” Brass hitch pin
5. 1 – Brass lock (to be provided by LDNR/CRD)
6. Reflective tape or reflectors

Additional Materials Needed For the Installation Process

1. Vibracore
2. Widow-maker: a cylindrical steel device that is approximately 36 inches in length, has an inside diameter greater than or equal to 5.5 inches, and weighs approximately 60 pounds; used for driving post
3. Drills and metal bits for stainless steel and driving screws if reflectors are used (minimum of 1/4” and ¾” bits)
4. Hack saw
5. Level

Installation

The field personnel shall install the continuous recorder using the following method. The method shall be established as follows:

Verification of site selection:

1. The site map, site characterization sheet, and a differential Global Positioning System (DGPS) instrument shall be used to locate the pre-determined site. Once the site has been located, the field personnel must verify that the site has not changed and is sufficient for establishment.
2. This verification shall be done by examining the site and answering the following questions: (1) Is the water level / water body deep enough so that the sensors will be submerged during the lowest water levels? (2) Is the site intrusive of a navigational waterway? (3) Is the pre-determined system of deployment sufficient for the site?
3. By answering the questions in step 2, the field personnel shall verify that the pre-determined set-up is sufficient for the site. If it is determined that the set-up is sufficient, the field personnel shall follow the appropriate steps for installation. <u>NOTE:</u> If the field personnel find the site inappropriate, the LDNR/CRD must be notified before the installation.

Procedures for the Mono-pole

The mono-pole is constructed in advance of the deployment field trip (Figure 9). The following steps provide a methodology for an acceptable installation process for the mono-pole:

1. Transport the mono-pole and all the necessary equipment needed for the installation process via the water vessel to the site.
2. Position and anchor the water vessel where the mono-pole will be deployed and in a manner that allows for a solid, stable work environment.
3. Obtain the depth of the water at the installation location. (This provides an estimate of how much of the pipe will be above the water and provides an estimate of when the plate will rest on the bottom.)
4. Place the mono-pole over the side of the water vessel in a plumb position.
5. Using the vibracore, vibrate the mono-pole to refusal or until the load plate rests on the bottom of the water body. (If refusal is met before the load plate rests on the bottom, then the widow-maker should be used to try and get the mono-pole deeper into the substrate.)
6. At the end of installation, the mono-pole shall be plumb.
7. If the top of the pipe was damaged during installation, the pipe shall be cut just below the damaged portion. A ¾" hole for the hitch pin and a ¼" hole for the elevation mark shall be drilled.
8. Document the following measurements on the "Continuous Recorder Water Level Sensor Data Sheet" (Appendix A, Form 4) by referring to Figure 14).
    a. Top of the ¼" hole to the top of the pipe (<u>not</u> top of cap)
    b. Top of the ¼" hole to the bottom of the continuous recorder
    c. Top of the ¼" hole to the water level sensor
    d. Top of the ¼" hole to the water line
    e. Top of the ¼" hole to the substrate
    f. Water depth
    g. Penetration depth
    h. Total pole length
    i. Mud line to the load plate (if not resting on bottom of water body)
    j. Amount of casing removed (if damage was done during installation)

    <u>NOTE:</u> The measurements must be transferred to the Excel "Site History" file provided by LDNR/CRD.

9. Attach reflective tape to the pipe.
10. The continuous recorder can now be deployed.
11. Secure the cap to the pipe using the hitch pin and brass lock.

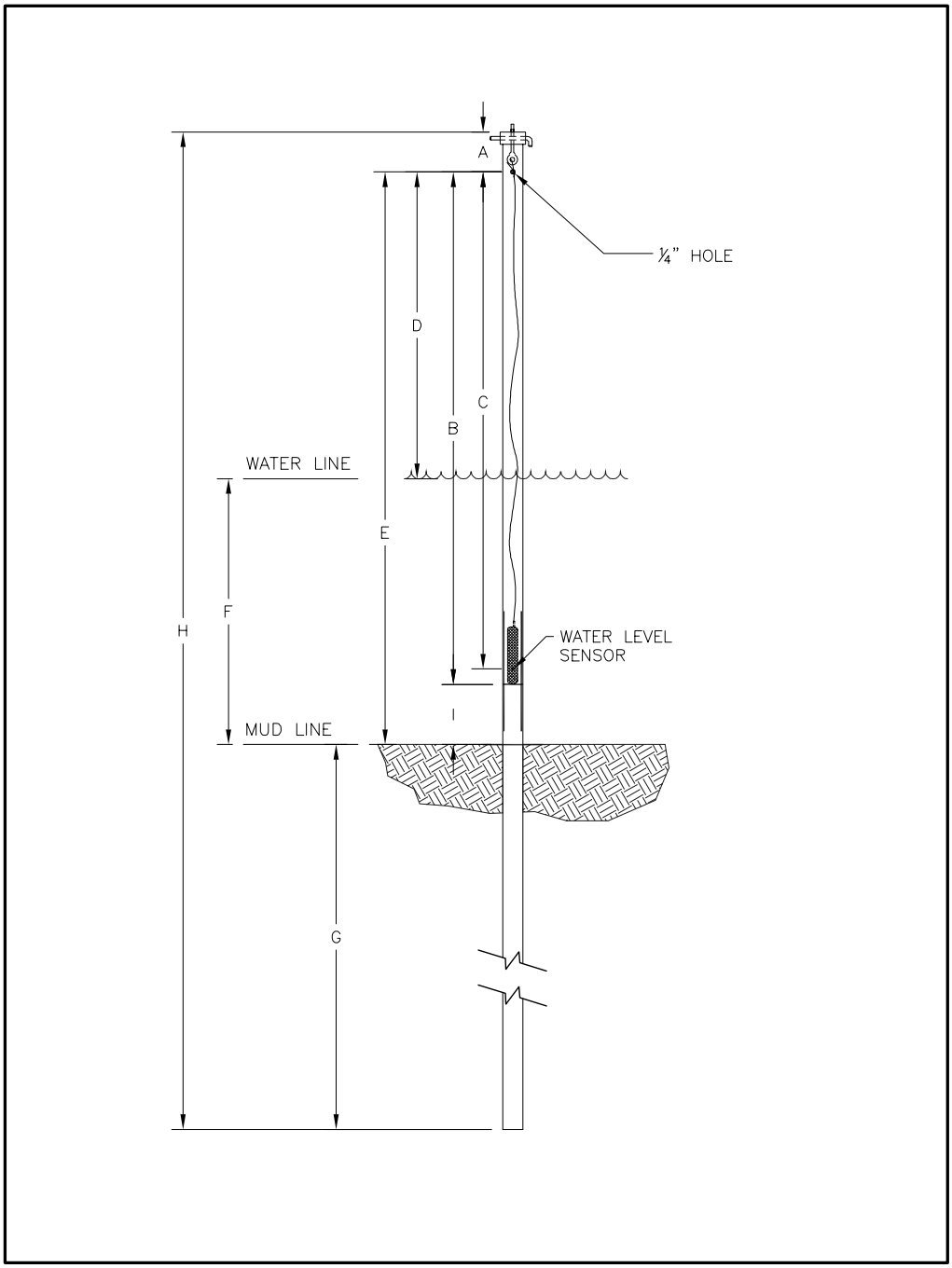

Figure 14: Schematic of distances needed to be measured elevation calculations for the mono-pole continuous recorder setup.

Marsh Well

Refer to Chapter 3.5 for the installation of the marsh well station. All measurements shall be obtained following the procedures for the wooden post and shall be documented on the "Continuous Recorder Water Level Sensor Data Sheet" (Appendix A, Form 4).

4.1.2. Deployment and Servicing

Deployment

The instruments described in this section are also capable of collecting temperature, specific conductance, and salinity data; however, this section only describes the information necessary for the water level data. The next chapter of this manual describes the salinity procedures which coincide with the water level procedures. For the purpose of this manual, the two variables were separated. It is essential to review the next chapter to complete the calibration sheet.

Prior to the initial deployment, the continuous recorder shall be programmed to record the date (mm/dd/yyyy), time (hh:mm:ss), water temperature (°C), specific conductance (µS/cm), salinity (ppt), water level (ft), and battery volts (v). The recorder must be programmed to record the time in Central Standard Time and must remain in that time configuration during Daylight Savings Time. The continuous recorder shall have all the previous data collected from another station or testing deleted. The only data that shall remain on the instrument is the data that was collected at the station it is deployed. On a yearly basis, the data must be deleted since the file names will repeat themselves.

Several measurements, calibrations, and readings must be obtained, if they were not obtained during the installation process, before the initial deployment. The information obtained from these measurements, calibrations, and readings shall be documented on the "Continuous Recorder Calibration Sheet" (Appendix A, Form 7), which is provided by the LDNR/CRD. These measurements and readings include:

1. Prior to initial deployment, the "Mark to Sensor Distance (ft)" must be measured. This is the distance between the nail which is placed on the wooden post or the top of the ¼" hole on the stainless steel pole to the water level sensor on the continuous recorder (do not confuse the water level sensor with the conductivity/salinity sensor). This measurement will allow the water level readings to be converted to a vertical datum (NAVD 88) when the nail or top of ¼" hole has been surveyed by a professional and licensed individual or company. This measurement may be obtained several ways; therefore, the "Continuous Recorder Water Level Sensor Data Sheet" (Appendix A, Form 4) shall be completed.
2. Calculate the Sensor Elevation (NAVD 88, ft) by using the Mark Elevation (NAVD 88, ft), provided by a professional surveyor, and the Mark to Sensor Distance (ft). Record the Sensor Elevation (NAVD 88, ft) in the appropriate

box of the 'Staff Gauge' section of the "Continuous Recorder Calibration Sheet".

3. Calibrate the instrument's water level sensor to zero (0) when it is out of the water prior to deployment. Follow the procedures in the owner's manual for the specific instrument being used. Record the "Depth Out of Water (ft)" reading after calibration in the 'Clean Reading' section.
4. Once the instrument has been placed into position for deployment and has stabilized, record the depth of the water from the instrument onto the calibration sheet in the 'Clean Reading' section.
5. Verify that the water depth reading is correct by using a surveyors measuring rod. Place the "Mark to Sensor Distance" value on the rod at the nail on the timber post or the top of the ¼" hole on the "mono-pole". This places the bottom of the rod (zero reading) at the water level sensor on the continuous recorder. Read the water level on the rod and place that number in the "Water Level on Rod (ft)" box on the calibration sheet under the 'Staff Gauge' section. This number should be within 0.10 ft. of the continuous recorder depth reading. If the difference between the numbers is greater than 0.10 ft., then a problem exists and must be rectified.
6. Add the "Sensor Elevation (NAVD, ft)" to the "Water Level on Rod (ft)" to get the "Water Level (NAVD 88, ft)."
7. Record the staff gauge reading in the "Staff Gauge (NAVD, ft)" box. The staff gauge was established to the vertical datum.
8. Calculate the difference between the "Staff Gauge (NAVD 88, ft)" reading and the "Water Level (NAVD 88, ft)" from the continuous recorder station. Record this value in the appropriate box. NOTE: The value should be less than 0.07 ft. If the value is greater, then measurements need to be taken to rectify the difference.

The LDNR/CRD requires the following when deploying a continuous recorder and requires the documentation in the 'Deployment' section of the calibration sheet:

1. The instrument only allows eight characters for the file name; therefore, the LDNR/CRD requires all file name to follow this order: **project**month*station* (Example: **CR**06*0098*)
2. All times must be in Central Standard Time and written in 24 hour time convention (e.g., 3:00 p.m. = 15:00). Even during Daylight Savings Time.
3. The manufacturer, the model number, and serial number of the continuous recorder must be documented.
4. The continuous recorders battery volts at the time of deployment must be documented.
5. The actual date and time the instrument is deployed must be documented.

After the initial deployment has taken place, the instrument needs to be serviced no earlier than 30 days after deployment and no more than 45 days after deployment unless otherwise stated or agreed upon by the LDNR/CRD.

Servicing

The instruments described in this section are also capable of collecting temperature, specific conductance, and salinity data; however, this section only describes the information necessary for the water level data. The next chapter of this manual describes the salinity procedures which coincide with the water level procedures. For the purpose of this manual, the two variables were separated. It is essential to review the next chapter to complete the calibration sheet.

All data and information concerning the condition of the station shall be documented on the "Continuous Recorder Calibration Sheet" (Appendix A, Form 7).

1. Upon arrival at the station, complete the top section of the calibration sheet by recording the project name, station number, basin/location, agency (company name) and collected by (names of the field personnel), and the marsh elevation (if applicable) for the station in the appropriate boxes.
2. Without disturbing the instrument, connect to the instrument using a laptop computer or a field instrument capable of interfacing with the recorder.
3. Record the date and time (24 hour convention) from the technician's watch (set to CSTime) and the instrument.
4. Record the instrument's 'dirty battery volts.'
5. Stop the instrument from logging and download the data file. Record the number of samples, the file name, and if successful.
6. In the 'Dirty Reading' section, record an in situ "dirty" water depth from the display unit attached to the continuous recorder.
7. Remove the continuous recorder from its secured position and place it in the water vessel.
8. Record the "Depth out of Water" reading when the instrument has stabilized.
9. Record the instruments manufacturer, model, and serial number in the top section of the calibration sheet.
10. Following the recommended cleaning procedures in the owner's manual, clean all sensors and the exterior such that the instrument is free of all biofouling agents.
11. Remove barnacles, oysters, and other biofouling agents from the inside and outside of the PVC or mono-pole. In saline waters, biofouling appears to be worse due to barnacles and oysters, thus the inside of the pipe should be cleaned on a regular basis. If these biofouling agents are allowed to build-up overtime, the removal of the instrument will become problematic.
12. Determine if the battery power remaining in the instrument is sufficient to power the instrument until the next servicing. If it is determined that the instrument does not have enough battery power to collect all the data, then the batteries must be changed.
13. Set the water sensor to zero (0.00) while the instrument is out of the water. Follow the procedures described in the owner's manual. Record the value after the instrument has accepted the calibration in the "Depth Out of Water" box of the 'Clean Reading' section of the data sheet. The value should be 0.000. A second calibration may be necessary to achieve 0.000.

14. Once the water level sensor has been calibrated, lower the instrument back into its unattended position.
15. In the 'Clean Reading' section, record the water depth reading once the instrument has stabilized.
16. Calculate the water level difference and percent difference by using the following formulas:

    water level difference (wld) = clean reading depth - dirty reading depth

    Then,

    percent difference = wld / clean reading depth * 100
17. Follow the owner's manual for setting the continuous recorder in an unattended mode. Complete the 'Deployment' section of the calibration sheet. Instructions are presented in the previous section (Deployment).
18. Check the desiccant pack to see if it needs changing. It should be changed a minimum of every 60 days.
19. Complete the information in the 'Staff Gauge' section by obtaining all the necessary measurements and readings.
    a. Record the "Water Level on Rod (ft)" value. This value is obtained by placing the "Mark to Sensor Distance (ft)" number at the nail or top of the ¼" hole on the surveyor's rod. This places the bottom of the rod at the instrument's water level sensor. Read the value where the surface of the water appears on the rod.
    b. Calculate the "Water Level (NAVD)" by adding the "Sensor Elevation (NAVD) and "Water Level on Rod (ft)" readings.
    c. Record the staff gauge reading in the "Staff Gauge (NAVD)" box.
    d. Subtract the values in the "Water Level (NAVD)" and "Staff Gauge" boxes and record the value in the "Staff Gauge – Water Level" box. The absolute value should be less than 0.07 ft. If the value approaches 0.10 ft., measurements shall be taken from the continuous recorder to rectify the problem.
20. Compare the "Water Level on Rod (ft)" measurement with the water depth reading in the 'Clean Reading' and/or 'Calibration Required' section of the calibration sheet. If the difference is more than 0.07 ft, then both values need to be examined for accuracy.
21. Secure the instrument and cable using the brass locks on the two brass hitch pins and the electrical box on the wooden post or secure the cap to the top of the pipe using the brass hitch pin and brass lock.
22. Notes shall be taken and documented in the 'Notes' section of calibration sheet and/or in a field notebook. These notes shall include:
    a. The water level in relation to the marsh surface. Approximate the depth of water above the surface or the distance below the surface.
    b. If the instrument is near a water control structure, document the flow direction of the water and approximate the speed of the water flow.
    c. The health of the vegetation around the station shall be noted.
    d. The health of submerged aquatic vegetation as well as abundance shall be noted.
    e. Any changes in the marsh with respect to erosion, subsidence, movement, etc. shall be noted.

If it is determined that any sensor is resting in the sediment and causing erroneous reading, then the instrument needs to be raised. This will cause all the measurements with respect to the water level sensor to be different; consequently, all the distances associated with the water level sensor need to be re-measured and documented on a "Continuous Recorder Water Level Sensor Data Sheet." The "Site History" Excel file shall be appended during the data processing phase with the new measurements.

Troubleshooting

The continuous recorder will be removed from the field when the instrument malfunctions. Examples of such malfunctions may include, but are not limited to, not being able to establish communication with the instrument, seeing an erroneous reading due to a malfunctioning sensor, or calibration of a sensor is not being accepted. Before removing the instrument from the field, several troubleshooting techniques shall be performed: 1) inspect the old batteries and compartment while changing the batteries and look for exploded batteries, acid and/or corrosion, 2) carefully clean all the sensors and attempt to calibrate, 3) check the cable connections between the continuous recorder and field display instrument, and 4) change the cable. If the continuous recorder is still malfunctioning, remove the existing instrument and replace with a new instrument. Make sure that the depth is calibrated on the replacement instrument. Document this replacement in the 'Deployment' section and follow the deployment procedures listed above. If the instrument is a different model or if the set-up has changed, then all measurements shall be re-measured and documented on a "Continuous Recorder Water Level Sensor Data Sheet." If the instrument belongs to the LDNR/CRD, malfunctioning instruments will be returned to LDNR/CRD field office responsible for the station accompanied by a written description of the malfunction.

4.1.3. Data Processing

The LDNR/CRD has implemented a two phase protocol for data processing. These two phases are referred to as data entry (Phase I) and quality assurance / quality control (Phase II). These two phases are conducted by separate individuals to assure that the final product is in 100% agreement with the data collected from the field.

Data Entry (Phase I)

The data entry phase includes entering all water temperature, specific conductance, and salinity data along with the water level data since the instrument collects each of these variables. To properly process the data from its field format to its final quality assurance / quality control (QA/QC) format, several files are needed:

1. Raw data file (.dat) from the field display unit.
2. Raw data file (.csv) from the YSI software (EcoWatch or equivalent) for continuous recorder data.
3. YearHour (.xls) provided by the LDNR/CRD to verify date and times.

4. Sondeqc (.xls) template provided by the LDNR/CRD to import the raw data for shifting and quality assurance.
5. Station history (.xls) template provided by the LDNR/CRD to record any information regarding the station, data, or instrumentation at the site.
6. Field trip report (.doc) template provided by the LDNR/CRD to document what occurred during the installation, deployment and/or servicing of the station.

Complete the procedure below using the electronic files to properly process the data obtained from the field.

1. Copy the "Deployment Date and Time" of the file that was downloaded from the field from the previous calibration sheet's 'Deployment' section.
2. Photocopy the "Continuous Recorder Calibration Sheet" used in the field. The original sheet will be properly stored during the QC process. The photocopy becomes the working copy throughout the QC process and the original will be corrected at the end of the process.
3. Transfer the raw data from the laptop or field display unit to a personal computer that has the electronic files provided by the LDNR/CRD following the procedures specified in the owner's manual for the field instrument.
4. Open the downloaded file (.dat) in the software program (EcoWatch for Windows—YSI or equivalent).
    a. Arrange the data in the appropriate order and format: date (mm/dd/yyyy), time (hh:mm:ss), temperature (°C), specific conductance (µS/cm), salinity (ppt), water depth (ft), and battery volts (v).
    b. Using the statistical function, check the minimum and/or maximum values for any data that may be incorrect (i.e., water level and salinity readings show a negative value for the minimum reading or maximum values that may seem to high).
    c. Export the .dat file as a comma delimited text (.csv) file using the same name as the .dat file.
5. Open the raw data file (.csv) in Excel to verify that the data are arranged in the correct columns. The order of the columns shall be: date (mm/dd/yyyy), time (hh:mm:ss), water temperature (°C), specific conductance (µS/cm), salinity (ppt), water depth (ft), and battery volts (v).
    a. Insert an empty column next to the date.
    b. Open the "YearHour.xls" file.
    c. Copy the same date and time period found in the .csv file from the "YearHour.xls" and paste in the empty column. Verify that there is no missing dates and times. If data are missing, then a new row shall be inserted into the file to contain the missing date and time. The data fields in the row shall remain blank.
6. Open the "Sondeqc.xls." This file contains three worksheets that serve as a template for the continuous recorder data including water temperature, specific conductance, water level, and battery volts. The three worksheets are:
    a. "Data": Enter the data from the calibration sheet in this worksheet. Formulas determine if the data needs to be shifted because of biofouling

on the continuous recorder. This worksheet contains three areas: the top area requires the input of data from the "Continuous Recorder Calibration Sheet" that was completed in the field. All the cells with the red font require a change and the information/data are obtained from the calibration sheet. On the lower portion of the spreadsheet, the raw data are pasted. The salinity and water level data are shifted for biofouling, and the water level data are converted to NAVD 88, Feet. Statistical summary and percent completeness calculations are located on the right side of the worksheet.

b. "Oracle": This worksheet puts the data from the "Data" worksheet into the appropriate format for the LDNR/CRD main database. Any erroneous data that are deleted from the shifted section of the data worksheet will appear as a zero value in the "Oracle" worksheet. These zero values must be deleted.

c. "Graphs": This worksheet contains two graphs. One graph shows the shifted salinity data and the shifted water elevation data to a vertical datum (NAVD 88, Feet). The other graph shows the depth and duration of flooding by overlaying the shifted water elevation (NAVD 88, Feet) with the marsh elevation (NAVD 88, Feet).

7. Before changing any information or pasting any data into the spreadsheet, save the file under a different name. The name of the file should be the same as the name of the raw data file except that it should be in an Excel file format (.xls).
8. Change all the red font information in the first 13 rows of the "Data" worksheet to match the information on the "Continuous Recorder Calibration Sheet" that corresponds to the data file.
9. Copy and paste the raw data excluding the headers from the .csv file into the first seven columns of the raw data portion of the "Data" worksheet.
10. Formulas have been incorporated into the spreadsheet to shift the salinity and water level data as well as convert the water level data to the vertical datum (NAVD88, Feet). These formulas are located in the four columns directly to the right of the 'Count' column and may need to be filled down to the end of the raw data if necessary. The 'Count' is used in the calculation of the shift and must begin with '0' at the first row of raw data and be filled all the way down to the end of the raw data. If the percent difference is greater than 5% between the dirty continuous recorder readings and the calibration instrument for the salinity or water level data, then a shift is applied in the shifted data columns. Scroll down the spreadsheet to make a visual check of the raw and shifted data. If any erroneous data need to be deleted, always delete the data from the SHIFTED columns - NEVER delete raw data from the file. Some examples of erroneous data include, but are not limited to: 1) In very low salinity environments, a biofouling shift on salinity in the negative direction may cause some shifted values to be negative. These negative values must be deleted and the resulting zeroes in "Oracle" should be removed. 2) Raw depth should not be negative. If negative raw depth values are encountered, there was either an instrument malfunction or the water level may have dropped below the depth sensor during the sampling period resulting in erroneous readings. In the first case, all shifted

data may need to be deleted beyond the point where the malfunction occurred. In the second case, you may need to only delete the shifted data taken while the sensor was out of the water. 3) When shifting either salinity or water level data as a result of biofouling, the raw data, while positive, may become negative in the adjusted columns; consequently, only the adjusted data shall be deleted.

11. While the spreadsheet is designed to handle 3000 lines of data, most files will not have this much data; consequently, any rows containing information below the last raw data sample must be deleted.
12. Change the heading of the summary statistics and percent completion page to reflect the project, station, and date and time period that the data represents. NOTE: The date and time should be exactly like the first and last reading of the data file using the format MM/DD/YYYY @ HH:MM:SS)
13. When the "Data" worksheet is complete, click on the "Oracle" worksheet.
    a. Delete any rows containing information beyond the end of the current sampling period.
    b. Delete the zeroes out of the shifted columns where any shifted data were deleted out of the "Data" worksheet. Never delete data from the raw data columns.
    c. Delete the zeroes out of the cells that have no data because the instrument was not recording.
14. Open the "Graphs" worksheet and adjust the graphs such that all the data are displayed on the graph for the entire sampling period. NOTE: This can be done by changing the row numbers in the source data of the graph to match the first and last row of data in the "Data" worksheet.
15. Change the headings of each graph to match the project name, station number, and the date range of the presented data.
16. While viewing the graphs, determine if any additional data need to be voided due to erroneous readings or the water level falling below the sensors.
17. If data were voided, this must be noted, dated, and initialed in the 'Comments' section of the "Continuous Recorder Calibration Sheet," as well as in the "Site History" Excel file (explained below).

The procedure above has placed the data into a format that will be accepted by the LDNR/CRD database; however, the transition between the data in the previous month's file and the data in the current file needs to be verified. The technician will compare the last two weeks of data from the previous file (if one exists) to the data in the beginning of the current file to verify that the transition is smooth, the pattern is similar, and there are no missing data. Often an hourly reading is missing while the instrument is being cleaned. If this occurred, insert a row at the beginning of the current data file in both the "Data" worksheet and the "Oracle" worksheet. Insert the missing date and time into the appropriate columns and leave the rest of the data row blank. If the transition between the two files seems to be erroneous, then the technician must resolve the problem by examining the data and the data sheet associated with the files. If it is determined that a data set must be voided, specific documentation must occur in the "Site History" file.

Once the technician has completed the review of the data and believes it to be 100% correct, the technician must print out the graphs from the "Graph" worksheet and the statistics and percent completeness portion of the "Data" worksheet. These graphs and summary statistics become part of a QA/QC packet.

Once the Excel spreadsheet is complete with respect to the data, the "Site History" Excel file (provided by the LDNR/CRD) must be completed and updated with respect to all the pertinent worksheets:

1. Site – Data History: This worksheet shall be updated every time the site/project is visited. This worksheet will provide a history for site visits as well as the dates data was voided and the reason for voiding the data.
2. CR Deployment_Removal: This worksheet tracks the make, model, and serial number of each continuous recorder at each station. When the instrument is removed from the field this worksheet needs to reflect the change by completing the Date Removed, Time Removed, and Notes columns. Then another line shall be added that contains the information regarding the instrument that was deployed in the previous instruments place. This provides a method for property control for the department with respect to the instrumentation.
3. Recorder Elevations: Any updates or changes that may have occurred as a result of changing instruments or other problems must be documented. Examples may include, but are not limited to the following:
    a. Raising of an instrument because sediment may have settled around the sensors. Consequently, the 'Mark to Sensor Distance' would change which would ultimately change the 'Sensor Elevation.'
    b. If another survey was performed and a discrepancy was found between the previous survey and the more recent survey.
    c. If another station was established because the other station was destroyed for any reason and the instrument was either not found or the station can no longer support a continuous recorder.

Once the Excel files have been completed, a field trip report must be generated. The field trip report must include: 1) field personnel and their respective agency, company, or organization on the trip, 2) purpose of the trip 3) general weather conditions, 4) sites that were sampled, 5) type of sampling that took place, 6) an explanation of any logistical problems encountered in the field, especially problems that may affect the data, 7) any notable biological activity or physical activity that may have altered the site, and 8) details of when and where the calibration instrument was calibrated and the solution used.

When the Excel files and field trip report have been completed, the technician must compile a quality assurance (QA) / quality control (QC) packet. This packet shall include:

1. the appropriate QA/QC checklist (Appendix A, Form 8) cover sheet
2. field trip report
3. photocopied "Continuous Recorder Calibration Sheet(s)" (depends on the number of stations in a packet)
4. graphs printed from the Excel file "Graphs" worksheet

5. summary statistics and percent completeness calculations printed from the Excel file "Data" worksheet

The QA/QC packet and associated Excel files are sent to another individual for further examination and verification. This individual is referred to as the QA/QC officer.

Quality Assurance / Quality Control (Phase II)

The QA/QC officer immediately dates the packet upon receipt. The QA/QC officer will read the report, provide grammatical corrections, suggest clarifications, and make comments as it pertains to the information on the calibration sheet(s). The QA/QC officer then examines the calibration sheet(s) for completeness and accuracy especially in the sections where calculations were performed in the field. The QA/QC officer must also check on the calibration sheet that the depth reading on the continuous recorder is within 0.07 ft of the 'Water Level on Rod,' and that the 'Staff Gauge – Water Level' difference is within 0.07 ft. The QA/QC officer must then ensure that:

1. All data were transferred correctly from the calibration sheet to the upper portion of the "Data" worksheet.
2. The starting/ending dates and times of the data within the Excel file correspond with the dates and times on the calibration sheets.
3. There is no suspect data in the file, all data have been shifted correctly, and that depth data were converted to NAVD 88, Feet. If there are missing data, it must have been noted and explained in the "Site History" file and on the calibration sheet.
4. There are no erroneous zeros in the "Oracle" worksheet due to deleted shifted data.
5. Graphs are correct, including the source data and heading (project name, station name, and date range).
6. The transition between the previous and current month's data is smooth and that no sample point is missing between the two sample periods due to instrument cleaning.

If mistakes or questions arise, then documentation must occur on the QA/QC checklist. At times it may be beneficial to place removable notes (e.g., Post-it® notes) on the photocopied data sheet.

The QA/QC officer also checks the "Site History" file to verify that the information regarding all aspects of the station are up-to-date and accurate.

Once the packet and files have been reviewed, the QA/QC officer shall initial and date those portions of the QA/QC checklist that have been accepted as complete according to the questions provided on the QA/QC checklist. Those areas that possess errors or have presented questions shall be addressed by the person responsible for Phase I.

Once the data collector has corrected or answered any problems found by the QA/QC officer, the QA/QC packet is returned to the QA/QC officer. The QA/QC officer

examines the questions and verifies that all the data and information is 100% correct. This process will continue until all the corrections have been made and all the questions have been answered to the satisfaction of the QA/QC officer. Upon approval of the packet, the QA/QC officer will initial and date the rest of the QA/QC checklist.

After the QA/QC packet has been finalized, the data collector or the QA/QC officer must obtain the original data sheet(s). If problems were found with the data sheet(s) during the QA/QC process, then the original data sheet(s) must be corrected. This process shall be carried out by using a black ball point ink pen. No one shall erase any data or information on the original data sheet. The proper procedure will be to draw a single line through the error and place the correction as close to the error as possible. The person will also place their initials and the date next to the correction.

Strategic Online Natural Resources Information System (SONRIS) Data Entry

After the QA/QC procedure has been completed on two successive data acquisition periods, the first data set shall be entered into the SONRIS database. Consequently, there will be a one QA/QC packet lag between the SONRIS database and the QA/QC packet. The SONRIS database is a storage and retrieval mechanism with respect to the continuous hydrographic data. The LDNR/CRD Restoration Technology Section (RTS) is responsible for the development and maintenance of the database as it pertains to field data and reports.

The LDNR/CRD/RTS has developed a user's manual for uploading hydrographic data into SONRIS; however, the help function is the most up-to-date reference for assistance. The help function contains the most recent methods for importing, exporting, or troubleshooting problems associated with the database. The manual is updated periodically as the database changes with technology. The latest version of the manual was released on December 29, 2003 with respect to the hydrographic data. To properly import the data into the SONRIS database, the User's Manual for Hydrographic and Emergent Vegetation Data Management dated December 29, 2003 shall be followed. The most current version of this manual must always be used.

The person responsible for the collection of data is also responsible for uploading the data into the SONRIS database. Once the person has followed the procedures outlined in the user's manual, the QA/QC officer is responsible for verifying the procedures have been followed properly and the data are properly stored in the database. Once the data has been accepted into the database, the QA/QC officer shall complete the QA/QC Checklist as it pertains to the database. Upon completion of this section, the QA/QC packet is completed and the data shall be turned over to the LDNR/CRD.

Any statistical analysis, summary graphics, or data that are requested must be downloaded from the SONRIS database and never directly from the Excel file.

4.1.4. Summary Data and Graphics

Twice per year (January and July), the previous 6-months (July) or 12 months (June) of QA/QC'ed, stored data shall be downloaded from Oracle. With these data, summary graphics shall be produced to show the entire period of salinity and water level data as well as flood depth and duration data. With the yearly data, summary statistics and percent completeness with respect to the analysis used in the monthly packets shall be performed and printed with the graphs and provided to the LDNR/CRD.

4.1.5. Deliverables

Upon completion of the QA/QC process (after the data are loaded into SONRIS) both hardcopies and electronic copies of the summary data and graphics, the original data sheets, the field trip report, the QA/QC packet, field notes, "Site History" file and any other information collected with respect to the station shall be delivered to the LDNR/CRD. Electronic files containing the data shall be in the appropriate deliverable format (Appendix B, Format 3) once the data has completed the QA/QC process. This also includes the raw data files (.dat) that were downloaded from the instrument. These shall be delivered electronically and stored in folders by station and year.

4.2. Marsh Wells

Marsh wells will consist of a continuous recorder that is identical to the instruments used to collect water temperature, specific conductance, salinity, and water level in the open water bodies. The difference between these two stations will be the location within the site and the use of the data; however, the procedure in which the data is to be downloaded, processed, QA/QC'ed, and delivered to the LDNR/CRD will remain the same. The LDNR/CRD shall develop procedures within its Restoration Technology Section (RTS) that will distinguish this type of data from the data collected in the open water bodies.

Once a site has been inspected and it has been determined through the 'Site Decision Tree' that a marsh well station will be established, the station shall be constructed according to the installation instructions found in chapter 3. Upon deployment of the instrument, the procedures for deployment shall remain the same as the procedures for the instruments in the open water body (chapter 4.1.2). The continued data collection, data processing, summary data and graphics, and deliverables shall remain the same as the procedures for the instruments in the open water body (chapter 4.1 sections 3-5). The difference among these types of stations is the use of the water level data. Data collected within the marsh well will provide information with respect to the depth and duration of flooding as long as the surface water is above the swamp/marsh surface. Once the surface water drops below the swamp/marsh surface it no longer acts as surface water and becomes ground water. Thus, it is crucial to know the swamp/marsh surface elevation.

5. SALINITY

High variability in water-level and salt-water intrusion have been shown to cause adverse effects on the health of coastal wetland ecosystems (Gagliano et al. 1981). As a corollary, the LDNR/CRD has specific goals to reduce variability in water level and decrease mean salinity values in many areas. Both changes in water level and salinity values will be measured on a continuous basis (defined as hourly, unless otherwise stated) using a pressure transducer and a salinity meter (Steyer et al. 1995). The LDNR/CRD currently utilizes the use of the YSI 6920, YSI 600XLM, or equivalent continuous recorder as the basic model that can measure water level via a pressure transducer, salinity, specific conductance, and water temperature on a continuous basis. Likewise, a YSI 30 or equivalent can measure salinity, specific conductance, and temperature at discrete locations and to assure the data logger is properly calibrated.

Due to the large diversity of ecosystems found in the coastal zone, differing procedures to measure salinity will need to be adapted to each site or area of investigation. For example, a marsh water body with sufficient yearly levels of water (i.e., does not dry out) will use a YSI 6920, YSI 600XLM, or equivalent continuous recorder to measure hourly salinity concentrations. Since these instruments are used to collect water level and salinity data simultaneously the method for field establishment is thoroughly explained in the previous chapter (Surface Water). This chapter explains the methods for deployment and servicing the instrument with respect to the salinity data.

In some cases, it may not be feasible to establish continuous recorders. In such cases, it is imperative that monthly sampling at discrete areas for water temperature, specific conductance, and salinity occur in adjacent marsh ponds on a monthly basis. These water quality readings are taken with a portable, hand-held instrument (e.g., YSI 30 or equivalent) that provides the user with water temperature, specific conductance, and salinity readings. Discrete readings provide data concerning the spatial and temporal variation in salinity throughout the area. Water level may also be determined by adding a weight near the sensor and graduating the cord. Depth is measured by gently lowering the cord to the subsurface, assuring that the cord is perpendicular, and recording the depth.

Instrumentation

The environmental monitoring instrument that shall be used for the LDNR/CRD must meet the following criteria. The instrument must be a multi-parameter, water quality measurement, and data collection system. The instrument must be capable of recording and storing water temperature (°C), specific conductance (µS/cm), salinity (ppt), and water level (feet) at intervals specified by the LDNR/CRD. Salinity concentrations will vary from fresh (<0.1 ppt) to sea (>30.0 ppt) and at times may be considered polluted.

The water temperature and specific conductivity sensor must meet or exceed the following standards. The temperature sensor must be able to function in a range of -5 to

45°C, have a range of ±0.15°C, a resolution of 0.01°C, and able to work in depths of 200 meters (656 feet). The conductivity sensor must be able to function in a range of 0 to 100 mS/cm, have an accuracy of ± 0.5% of readings, a resolution of 0.001 mS/cm to 0.1 mS/cm, and able to function in 200 meters (656 feet) of water. The salinity values are calculated from the conductivity and water temperature readings and must have a range of 0 to 70 ppt, an accuracy of ± 1.0% of readings or 0.1ppt (whichever is greater), and a resolution of 0.01 ppt.

Along with the sensor specifications above, the instrument shall be capable of transferring the raw data through a field display unit or field computer to an Excel spreadsheet for the production of graphs and monthly summary data analysis before the data is uploaded into the LDNR/CRD's main database. The LDNR/CRD has developed an extensive procedure that shall be followed with respect to the instruments field deployment, servicing, data process, data storage, statistical analysis, and graphic display of analysis.

To verify that the continuous recorder is within calibration at the time of deployment and to calculate the drift of the continuous recorder due to biofouling, a portable, hand-held discrete instrument (YSI 30 or equivalent) is used. This water quality instrument provides the user with water temperature (°C), specific conductance (µS/cm), and salinity (ppt). This instrument is also used to collect readings at discrete stations.

The YSI 30 or equivalent must be capable of taking salinity readings in water depths up to 7.6 meters (25 feet). The YSI 30 or equivalent must be capable of field calibration by using push buttons, have a backlit display, automatically compensate for temperature, and use a four-electrode conductivity cell. Minimum accuracy requirements for the instrument are found in Table 2. Any instrumentation that does not meet these specifications must be approved by the LDNR/CRD.

Table 2: Conductivity, salinity, and temperature range and accuracy minimum standards for the handheld water quality units.

Measurement	Range	Resolution	Accuracy
Conductivity	0 to 499.9 µS/cm	0.1 µS/cm	±0.5% full scale
	0 to 4999 µS/cm	1 µS/cm	±0.5% full scale
	0 to 49.99 mS/cm	0.01 mS/cm	±0.5% full scale
	0 to 200.0 mS/cm	0.1 mS/cm	±0.5% full scale
Salinity	0 to 80 ppt	0.1 ppt	±2% or ±0.1 ppt
Temperature	-5 to +95°C	0.1°C	±0.1°C

5.1. Salinity and Water Level Continuous Recorder

The instrumentation and field deployment used to record salinity is the same as those used to collect the water level data; therefore, the standards used in the previous chapter to determine the type of deployment system applies to this section. Refer to 4.1 and 4.1.1 for information concerning the reasoning for determining the type of station and the method in which it is deployed.

5.1.1. Deployment and Servicing

Deployment

The procedures set forth in this section deal solely with the salinity sensor. Any procedure or information regarding the water level sensor shall refer to the previous chapter (Surface Water). The deployment of this instrument requires both procedures to be conducted simultaneously.

Prior to initial deployment, the instrument must be programmed according to the specifications in the Surface Water chapter; however, more calibrations and readings must be obtained for the salinity sensor. The information obtained from the calibration and readings shall be documented on the "Continuous Recorder Calibration Sheet" (Appendix A, Form 7). These measurements and readings include:

1. Calibrate the continuous recorder and hand-held instrument's salinity probe to a known conductivity standard that is similar to the ambient water salinity concentration at the time of deployment. Document the calibration and calibration standard in the 'Comments' section of the calibration sheet.
2. Verify that the continuous recorder has accepted the calibration by using the calibrated hand-held salinity meter (YSI 30 or equivalent) which is also used for discrete readings.
    a. Place the two salinity probes next to each other and lower them into the water to the deployment depth.
    b. Record the water temperature, specific conductance, and salinity reading from both instruments in the 'Clean Reading' section of the calibration sheet.
    c. Calculate the specific conductance difference by using the formulas:

        Specific conductance difference = calibration instrument - constant recorder

        Record the value in the appropriate box.

        Percent difference = specific conductance difference / specific conductance (of the calibration instrument) *** 100**

        If the percent difference is below 5%, then the instrument is calibrated. If the percent difference is above 5%, then the instrument needs to be re-calibrated or is malfunctioning (see section on calibration, steps 18-20 of servicing below).
3. Once the instrument is calibrated, place the continuous recorder into position for deployment.

The LDNR/CRD has developed specific protocols with respect to the deployment of a continuous recorder. These protocols were developed to provide continuity between all the offices collecting data for the LDNR/CRD. These protocols deal with file names, date and time format, and the tracking of instrumentation. The specific deployment protocols are described in the previous chapter.

After the initial deployment has taken place, the instrument needs to be serviced no earlier than 30 days after deployment and no more than 45 days after deployment unless otherwise stated or agreed upon by the LDNR/CRD.

Servicing

As previously discussed, the collection of water level and salinity data occur simultaneously; therefore, many steps that occur during the servicing of the continuous recorder have been duplicated in this section (due to the organizational style of this document). Those steps that begin with *Water Level, Servicing #:* indicate they are repeated from the water level chapter under the servicing section. These steps have been included for clarification purposes. Steps that do not posses this nomenclature have not been explained previously and relate directly to the salinity data.

All data and information concerning the condition of the station shall be documented on the "Continuous Recorder Calibration Sheet" (Appendix A, Form 7).

1. Calibrate the hand-held instrument before using and document the solution used in the 'Comments' section. NOTE: Discard the calibration solution used to calibrate the instrument.
2. *Water Level, Servicing 1*: Upon arrival at the station, complete the top section of the calibration sheet by recording the project name, station number, basin/location, agency (company name), collected by (names of the field personnel), and marsh elevation (if applicable) for the station in the appropriate boxes.
3. *Water Level, Servicing 2*: Without disturbing the instrument, connect to the instrument using a laptop computer or a field instrument capable of interfacing with the recorder.
4. *Water Level, Servicing 3*: Record the date and time from the technician's watch (set to CSTime) and the instrument.
5. *Water Level, Servicing 4*: Record the instrument's 'dirty battery volts'.
6. *Water Level, Servicing 5*: Stop the instrument from logging and download the data file. Record the number of samples, the file name, and if successful.
7. Lower the hand-held salinity meter probe to a depth near the sensor of the continuous recorder.
8. In the 'Dirty Reading' section, record an in situ "dirty" water temperature, specific conductivity, and salinity from the display unit attached to the continuous recorder.
9. In the 'Dirty Reading' section, record the readings from the hand-held salinity meter. This includes the water temperature, specific conductance, and salinity.
10. *Water Level, Servicing 7*: Remove the continuous recorder from its secured position and place it in the water vessel.
11. Calculate the specific conductivity difference and the percent difference between the continuous recorder and the calibration instrument. This is accomplished by using the following formulas:

Specific conductance difference = calibration instrument - constant recorder

Then,

Percent difference = specific conductance difference / specific conductance (of the calibration instrument) * 100

12. Following the recommended cleaning procedures in the owner's manual, clean all sensors and the exterior such that the instrument is free of all biofouling agents.
13. *Water Level, Servicing 11*: Remove barnacles, oysters, and other biofouling agents from the inside and outside of the PVC or mono-pole. In saline waters where biofouling appears to be worse due to barnacles and oysters, the inside of the pipe should be cleaned on a regular basis. By not removing these biofouling agents, eventually the removal of the instrument will become problematic.
14. *Water Level, Servicing 12*: Determine if the battery power remaining in the instrument is sufficient to power the instrument until the next servicing. If it is determined that the instrument does not have enough battery power to collect all the data, then the batteries must be changed.
15. Place the sensors from the hand-held salinity meter and continuous recorder side by side and lower them in the water to the deployment depth of the continuous recorder.
16. Record the water temperature, specific conductance, and salinity of both instruments in the appropriate boxes under the 'Clean Readings' section.
17. Using the formulas stated in step 11, calculate the specific conductance difference and the percent difference for the 'Clean Readings.'
18. If the percent difference is <5%, then the instrument does not need calibration (proceed to step 22). If the percent difference is ≥ 5%, then the instrument needs to be calibrated (Perform steps 19-22).
19. Calibration of the salinity probe for the continuous recorder. Use a standard that is closest to the specific conductance reading on the salinity meter. Calibrate the continuous recorder following the procedures in the owner's manual for the instrument.
20. In the 'Calibration Required' section, document that the instrument accepted the calibration and the solution used for calibration.
21. Lower both instruments back into the water to verify that the readings are now within 5% of each other.
    a. Record the temperature, specific conductance, and salinity of both instruments in the 'Calibration Required' section.
    b. Perform the specific conductance and percent difference calculations and record the values.
    c. If the continuous recorder is still out of calibration, try to trouble shoot the instrument or change the instrument out with the spare. If a spare is used this instrument needs to be calibrated.
22. *Water Level, Servicing 14:* Lower the instrument back into its unattended position.

23. Follow the owner's manual steps for setting the continuous recorder in an unattended mode. Follow the guidelines for files name, etc. in the section *Water Level,* **Deployment** section of the previous chapter.
24. *Water Level, Servicing 21*: Secure the instrument and cable using the brass locks on the two brass hitch pins and the electrical box on the wooden post or secure the cap to the top of the pipe using the brass hitch pin and brass lock.
25. *Water Level, Servicing 22*: Notes shall be taken and documented in the 'Notes' section of the calibration sheet or in a field notebook. These notes shall include:
    a. The water level in relation to the marsh surface. Approximate the depth of water above the surface or the distance below the surface.
    b. If the instrument is near a water control structure, document the flow of the water and approximate the speed of the water flow.
    c. The health of the vegetation around the station shall be noted.
    d. The health of submerged aquatic vegetation as well as abundance shall be noted.
    e. Any changes in the marsh with respect to erosion, subsidence, movement, etc. shall be noted.

Troubleshooting

Refer to the troubleshooting section in chapter 4.1.2.

5.1.2. Data Processing

Refer to chapter 4.1.3 (Data Processing).

Strategic Online Natural Resources Information System (SONRIS) Data Entry

Refer to the SONRIS section in chapter 4.1.3 (Data Processing).

5.1.3. Summary Data and Graphics

Refer to chapter 4.1.4 (Summary Data and Graphics).

5.1.4. Deliverables

Refer to the chapter 4.1.5 (Deliverables).

5.2. Discrete Sampling

Discrete samples include water quality readings that are collected on a monthly basis from the same location that has been randomly selected by the LDNR/CRD for specific purposes related to specific projects. These water quality readings are taken with a portable, hand-held instrument (YSI 30 or equivalent) that provides the user with water temperature (°C), specific conductance (µS/cm), and salinity (ppt). Estimated water depth (ft) readings are obtained at each location using the graduated cable on the YSI 30 or equivalent. Discrete readings provide data concerning the spatial and temporal variation in salinity throughout the area.

Discrete readings are unique in the aspect that the data collection takes place in the same location; however, there are no station establishment materials associated with this type of sampling. The readings take place in the same location of a water body (lake, bayou, navigational channel, marsh pond), but there is no need to establish any distinctive markings. Repeated measures are obtained by using global positioning systems to ensure the readings are occurring in the same location. Coordinates shall be provided by the LDNR/CRD once the location of each station has been determined.

The discrete sampling locations are selected to indicate a spatial and temporal variation in salinity throughout the area over time. Since it is not cost effective to deploy a continuous recorder in every location possible, discrete readings are taken. Over time the analysis of these readings coupled with the continuous recorder data provide a status and trends with respect to the movement of salinity within an area. In order to achieve quality data, the LDNR/CRD has developed extensive protocols with respect to instrument calibration, field sampling methods, and instrument quality assurance.

Before readings are taken in the field with a hand-held water quality meter, the meter must be calibrated for quality assurance. Since the meter is capable of measuring a wide range of salinity concentrations, the instrument shall be calibrated with a solution that is relatively close to the conditions in the field. To maintain the highest degree of accuracy, the instrument must be calibrated whenever the instrument is turned on or when the field conditions have dramatically changed. Procedures for calibrating the instrument are found in the owner's manual.

5.2.1. Calibration

Using the YSI 30 or equivalent owner's manual, follow the procedures on how to calibrate the instrument, but also use the LDNR/CRD protocol for calibration for more specific instructions.

1. The conductivity probe must be clean and free from any organic or mineral sediment.
2. Rinse the probe with conductivity-free water, preferably deionized water, between changes of calibration solutions. Conductivity standards must be purchased from an approved manufacturer or supplied by the LDNR/CRD.

Once the standard is removed from its original container, it shall be discarded after its use since the standard is considered contaminated.

3. Calibrate the instrument using a conductivity standard that brackets the range of the field samples. The concentration of the standard used for the calibration should be based on the testing needs for the field activity. A single point check standard in the range of the sample concentration to be measured shall be used for field screening and shall be within ±5% range of accuracy of true value for the calibration to be acceptable. NOTE: It is important that the calibration process established by the instrument manufacturer be examined in order to determine suggested concentrations of the conductivity standards for the operating environment encountered at the time of field sampling.
4. Using the manufacturer's recommended container for calibration, transfer the appropriate amount of solution to the container.
5. Suspend the probe in the solution so that the electrode does not rest against the container. Make sure the electrode's vent hole is submerged. Move the probe vigorously from side to side to free the vent hole of air bubbles if necessary.
6. Calibrate the instrument by following the manufacturer's manual for calibration.
7. Document the concentration of the standard used on the "Discrete Hydrographic Data Sheet" (Appendix A, Form 9).

Calibrations shall be performed monthly in a controlled environment for the assurance of quality data. The instrument must be examined for cleanliness, workmanship, and data quality. With respect to cleanliness, the instrument and sensors must be checked and cleaned of any biofouling that may be contaminating the accuracy of the readings. The examination for workmanship means a thorough examination for cracks, cuts or damage to the housing, cable, and sensors. The most important aspect of the monthly calibration is the accuracy of the instrument. The calibration is accomplished by using a thermometer and quality calibration solution. These readings assure the user that the instrument is accurate. The protocol for monthly inspections of the hand-held meter is found in the Quality Assurance section and a data sheet (Appendix A, Form 10) must be completed. The form is a method of documentation to assure the LDNR/CRD that the instruments being used are of the highest quality.

A weight may be fastened to the cable near the probe to ensure the probe remains at the proper depth as the water vessel drifts. It also helps to maintain a near plumb line to assist in accurately determining the depth of the water column. In areas where the water may be moving, the probe is able to remain at the proper depth without floating.

5.2.2. Data Collection

1. Using the "Discrete Hydrographic Data Sheet" (Appendix A, Form 9), complete the top section.
2. Upon arrival document the station number, the date and time in Central Standard Time (CST) using the 24-hour military code on the field data sheet for this reading.

3. Gently lower the probe into the water until it rests on the subsurface. Record the water depth (ft) on the field data sheet if the instrument has this parameter.

   NOTE: If the instrument does not have a water depth sensor, use the following procedure. Before using the instrument in the field, use a calibrated measuring device and place a piece of waterproof tape at 1 foot increments along the cable. Make sure to begin from the tip of the probe and continue the length of the cable. Gently drop the probe into the water until it touches the bottom. Measure the water's depth with the aid of the calibrated tape marks along the cable and record the depth on the data sheet to within approximately 0.3 meters (0.5 feet) accuracy. Pull the probe completely out of the water and rinse it free of organic matter before continuing with data collection.
4. Gently drop the probe until it is suspended in the bottom 20% of the water column. Do not allow the probe to rest on the bottom. Record the bottom readings for temperature (°C), specific conductance (µS/cm), and salinity (ppt). Pull the probe completely out of the water. NOTE: If the water depth is ≤ 1.5 ft., then both readings are the same.
5. Gently drop the probe until it is suspended within the top 20% of the water column. Record the bottom readings for temperature (°C), specific conductance (µS/cm), and salinity (ppt).

Additional Quality Control Readings

1. The discrete reading instrument shall remain powered if data are being collected all day with the instrument.
2. With the conductivity meter, a minimum of three additional readings (multiple readings) shall be collected from the surface and recorded on the field data sheet and noted in the field report. This should occur when the field team has collected data at multiple stations during the day.
3. A separate digital thermometer shall be used to collect an additional temperature reading alongside the multiple surface readings and noted in the field report. This thermometer shall be calibrated and shall be able to read ±0.1°C degrees.

5.2.3. Quality Assurance

Every hand-held salinity meter used to collect data shall be tested and calibrated monthly using the following protocol and the completion of the "Monthly Hand-held Salinity Meter Calibration Data Sheet" (Appendix A, Form 10).

1. Obtain a thermometer that has been manufactured to the standards set by the American Society for Testing and Materials. This thermometer should have the following minimum capabilities: range of 0°C to 100°C and divisions of 0.1°C.
2. Pour a generous amount of a known calibration solution into a container that has been cleaned with deionized water and rinsed with the calibration solution. NOTE: Do not pour this solution back into the bottle.
3. Place the thermometer into the solution and set it aside for a few minutes. This allows the solution to obtain room temperature and allows the thermometer to become acclimated to the solution.

4. Take this time to examine the salinity meter. Check for cuts on the wire, sufficient battery life, the instrument is clean, the key pad is working properly, and the LED screen is readable.
5. On the data sheet, record the temperature from the thermometer. Place the probe into the solution and record the temperature, specific conductance, and salinity once it has stabilized.
6. If the specific conductance reading is off, calibrate the instrument to ensure it is working correctly and maintaining the calibration.
7. Complete the data sheet with the required information.
8. If the temperature between the thermometer and the salinity meter is greater than 1 degree, then the instrument should be sent in for inspection unless the instrument has the capability of adjusting the temperature.

5.2.4. Data Processing

The LDNR/CRD has implemented a two phase protocol for data processing. These two phases are referred to as data entry (Phase I) and data quality assurance / quality control (Phase II). These two phases are conducted by separate individuals to assure that the final product is in 100% agreement with the data collected during the field sampling procedure.

Data Entry (Phase I)

Phase I is conducted by the individual responsible for the field data collection. Upon returning from the field, photocopies are produced of the original data sheet(s). The original data sheets shall be filed systematically until both phases are complete and the LDNR/CRD has accepted the final product. As part of the final deliverable product, the LDNR/CRD requires the original data sheet(s) as well as the photocopies.

Using the template Excel spreadsheet (discrete_qc.xls) that has been developed and provided by the LDNR/CRD, the data collector shall save the template using the following naming convention: Discrete_*date*.xls; e.g., Discrete_August2005.xls. This ensures that the template does not get changed accidentally and provides a working copy of the file.

Working from the photocopy, the data are transferred from the field data sheet(s) to the Excel spreadsheet. The person responsible for the field data collection shall transfer 100% of the data into the corresponding cells of the spreadsheet. Once the data and information have been transferred, they must check to verify that the data entry has been completed and all numbers and notes are 100% correct.

Once the Excel files have been completed, a field trip report must be generated. The field trip report must include: 1) field personnel and their respective agency, company, or organization on the trip, 2) purpose of the trip, 3) general weather conditions, 4) sites that were sampled, 5) type of sampling that took place, 6) an explanation of any logistical problems encountered in the field, especially problems that may affect the data, 7) any

notable biological activity or physical activity that may have altered the site, and 8) details of when and where the calibration instrument was calibrated and the solution used.

When the data have been completely entered and the field trip report has been generated, the appropriate quality assurance / quality control (QA/QC) checklist (Appendix A, Form 8) is attached to the copied data sheet(s) and the field trip report. This compilation is referred to as the QA/QC packet. The QA/QC packet is sent to another individual for further examination and verification. This individual is referred to as the QA/QC officer.

Quality Assurance / Quality Control (Phase II)

The QA/QC officer immediately dates the packet upon receipt. Then the QA/QC officer will read the report and provide grammatical corrections, suggest clarifications, and make comments as well as verifying that all the necessary information is contained in the report. The QA/QC officer then compares the data sheet(s) with the corresponding Excel data file. The QA/QC officer is examining the Excel file for any erroneous data that may have occurred during the transcription phase or that was written incorrectly in the field. If mistakes or questions arise, then documentation must occur on the QA/QC checklist. At times it may be beneficial to place removable notes (e.g., Post-it® notes) on the photocopied data sheet. Once the packet has been reviewed, the QA/QC officer shall initial and date all portions of the QA/QC checklist that are in accordance with the questions provided on the QA/QC checklist. Those areas that possess errors or have presented questions for clarification shall be addressed by the person responsible for Phase I.

Once the data collector has corrected or answered the problems found by the QA/QC officer, the QA/QC packet is again delivered to the QA/QC officer. The QA/QC officer examines the questions and verifies that all the data and information are 100% correct. This process will continue until the Excel data file and the field trip report has been accepted by the QA/QC officer. Upon acceptance of the packet, the QA/QC officer will initial and date the rest of the QA/QC checklist.

After the QA/QC packet has been finalized, the data collector must obtain the original data sheets. If problems were found with the data sheet(s) during the QA/QC process, then the original data sheets must be corrected. This process shall be carried out by using a black ball point ink pen. No one shall erase any data or information on the original data sheet. The proper procedure will be to draw a single line through the error and place the correction as close to the error as possible. The person will also place their initials and the date next to the correction.

Strategic Online Natural Resources Information System (SONRIS) Data Entry

The SONRIS database is a storage and retrieval mechanism with respect to the discrete hydrographic data. The LDNR/CRD Restoration Technology Section (RTS) is responsible for the development and maintenance of the database as it pertains to field data and reports. Once the discrete hydrographic data has been accepted by the QA/QC

officer as 100% correct, the person responsible for phase I shall transfer the data from the Excel data file to the SONRIS database.

The LDNR/CRD/RTS has developed a user's manual for uploading the discrete hydrographic data; however, the help function is the most up-to-date reference for assistance. The help function contains the most recent methods for importing, exporting, or troubleshooting problems associated with the database. The manual is updated periodically as the database changes with expansion and technology. The latest version on the manual was released in December 2003 with respect to the discrete hydrographic data. To properly import the data into the SONRIS database, the "User's Manual for Hydrographic and Emergent Vegetation Data Management" dated December 29, 2003 shall be followed. The most recent version of the document shall be used to input the data into the database.

The person responsible for the collection of data is also responsible for uploading the data into the SONRIS database. Once the person has followed the procedures outlined in the user's manual, the QA/QC officer is responsible for verifying the procedures have been followed properly and the data is properly stored in the database. Once the data has been accepted into the database, the QA/QC officer shall complete the QA/QC Checklist as it pertains to SONRIS. Upon completion of this section, the QA/QC packet is completed and the data shall be delivered to the LDNR/CRD.

Any statistical analysis, summary graphics, or data that are requested must use data downloaded from the SONRIS database.

5.2.5. Summary Data and Graphics

On a yearly basis, each station that has discrete data associated with it must be downloaded for analysis and graphic summary. The data are to be analyzed for the mean salinity values collected at the station for the year. Since several stations may be associated with a particular project, the LDNR/CRD will provide a list of stations that are associated with a project. Once the mean salinity values are obtained, summary graphs shall be produced using a standard format provided by the LDNR/CRD.

5.2.6. Deliverables

Upon completion of the QA/QC process, the original data sheets, the field trip report, the QA/QC packet, the field notebooks, the quality assurance sheets, and all the associated electronic files (see Appendix B, Format 4) shall be delivered to the LDNR/CRD.

6. FLOATING MARSH MAT

Due to the varying degrees of thickness among each floating marsh mat site, two measuring systems have been developed and utilized by the LDNR/CRD to measure the vertical movement. The floating system is utilized in areas that have thicker mats in relation to the areas where the static system will be employed. The floating system relies on the mat's ability to carry the weight of the system without influencing its ability to move vertically. In areas where the mat is thin and will not support the floating system, the static system will be utilized. This system relies on the mat's ability to move vertically while a post is embedded through the mat and into the underlying substrate.

The floating system requires a continuous recorder to suspend below the marsh mat in the fluid ooze layer using a YSI 600XLM or equivalent that collects water temperature, specific conductance, salinity, and water level. Knowing the distance that the water level sensor rests below the marsh surface, calculations can be performed to determine the water level in relation to the marsh surface. By having a continuous recorder deployed in an adjacent channel that has an elevation reference, the marsh mat surface and water level can be converted to a vertical datum.

The static system, or counterweight and pulley system, utilizes a cable that is attached to the marsh surface via a spiral auger. As the marsh surface moves vertically, the cable rotates around the pulley system which is attached to the digital shaft encoder. This rotation is converted to a digital signal which is recorded by the data logger (OTT-Thalimedes or equivalent) and can be downloaded during a later field trip. This recorder only measures the movement of the marsh mat.

Both of these techniques have been proven to work in different environments; consequently, the LDNR/CRD will decide which system will be utilized at each site. The LDNR/CRD will provide the continuous recorders (YSI 600XLM, OTT-Thalimedes, or equivalent) for each system while the contractor will supply the other materials.

6.1. Floating System

The LDNR/CRD has developed a method to measure the movement of the marsh surface in a floating marsh environment. This method utilizes a piece of plywood and a series of PVC pipes that are secured to the surface of the marsh by four spiral anchors. Within these PVC pipes, a YSI 600XLM is deployed to record the water temperature, specific conductance, salinity, and water level on a hourly basis, unless otherwise specified by the LDNR/CRD. The following procedures are used to construct the housing for the continuous recorder.

Materials List

1. Schedule 40, 6" PVC pipe
2. Schedule 40, 6" PVC cap

3. Schedule 40, 2” PVC pipe
4. Schedule 40, 2” PVC cap
5. Schedule 40, 1” PVC pipe
6. Treated 5/8” plywood
7. Brass hitch pins, 9” long
8. Brass locks (provided by the LDNR/CRD)
9. Spiral anchors, four
10. L-brackets, 2”
11. Stainless steel or equivalent bolts, ¼”-20x1/2”
12. Stainless steel or equivalent nuts, ¼”-20x1”
13. Marine caulk and adhesive

Tools

1. Drill
2. Drill bits: 7/32”, ¼”, 9/32”, 3/8”, ½”, 5/8”, ¾”, 1”, 2-3/4”
3. Tap, ¼”-20
4. Hacksaw
5. Tape measure

Construction

Mounting Base (Figure 15A)

1. Cut the plywood to measure 2’x2’.
2. Draw lines from corner to corner on the 2’x2’ piece to locate the center and locate the holes for the anchors.
3. Drill a 2-3/4” hole in the center of the board.
4. Drill 1” holes approximately 4” from each corner of the board along the corner lines.

Outside Cover (Figure 15B)

1. Cut the 6” PVC pipe to a length of 30”. Make sure the cut is square.
2. If the PVC pipe is not perforated, then drill a minimum of twenty (20) ¾” holes in the pipe. NOTE: No holes shall be drilled 3” from either end of the pipe.
3. Place the 6” PVC cap on one end and drill a ¾” hole through the assembly. This will enable a hitch pin to pass through the pipe and cap to lock the instrument.
4. Attach four 2” L-brackets on the opposite end of the 6” PVC pipe from the cap at 90 degrees from one another with the stainless steel or equivalent ¼”x20x1/2” bolts and nuts. NOTE: The holes on the brackets may need to be drilled with a 9/32” bit.

Insert Tube (Figure 15C)

1. Take a 10' length of 2" PVC pipe and measure 24" from one end.
2. With the bottom of a 2" L-bracket on the mark and the top pointed towards the short end of the PVC, mark the mounting holes at 120 degree angles from one another.
3. Drill the 7/32" mounting holes with a drill press to ensure straightness.
4. Thread the 7/32" mounting holes with a ¼"x20 tap.
5. Drill out the holes on one leg of the L-bracket with a 9/32" drill bit.
6. Fill the tapped holes on the 2" PVC and coat the underside of the L-bracket with marine calking and adhesive.
7. Attach L-brackets (using the drilled out holes) with the stainless steel or equivalent bolts (1/4"x20x1/2").
8. Drill ½" holes in 4 rows 2-3" apart around the entire length of the pipe below the L-bracket.

Mounting the Base, Insert Tube, and Outside Cover (Figure 15D)

1. Align the insert tube so that it is centered in the 2-3/4" hole in the mounting base and attach it to the mounting base using the L-brackets and the 1" stainless steel or equivalent bolts and nuts.
2. Align the outside cover over the insert tube so that it is centered around the insert tube on the mounting base. Attach the cover to the mounting base using the L-brackets and the 1" stainless steel or equivalent bolts and nuts.
3. Drill a ¾" hole through the outside cover and insert tube approximately 8" above the mounting base. NOTE: This step facilitates the hitch pin for the retaining rod.

Retaining Rod

1. Insert a 10' length of 1" PVC pipe into the insert tube so that approximately 3-4" is above the top of the insert tube.
2. Mark the 1" pipe in the center of the ¾" hole just drilled (step 3 above). Drill a 3/4" hole through the pipe at the mark.
3. Put the pipe back into the insert tube and make certain that the locking hitch pin can be inserted through the outside cover, insert tube, and retaining rod.

Field Station Establishment

Tools (Minimum)

1. Soil corer or auger, 3" diameter
2. Spiral anchors
3. Surveyor rod and/or measuring tape capable of measuring in feet, tenths, and hundredths
4. Hacksaw or PVC cutter

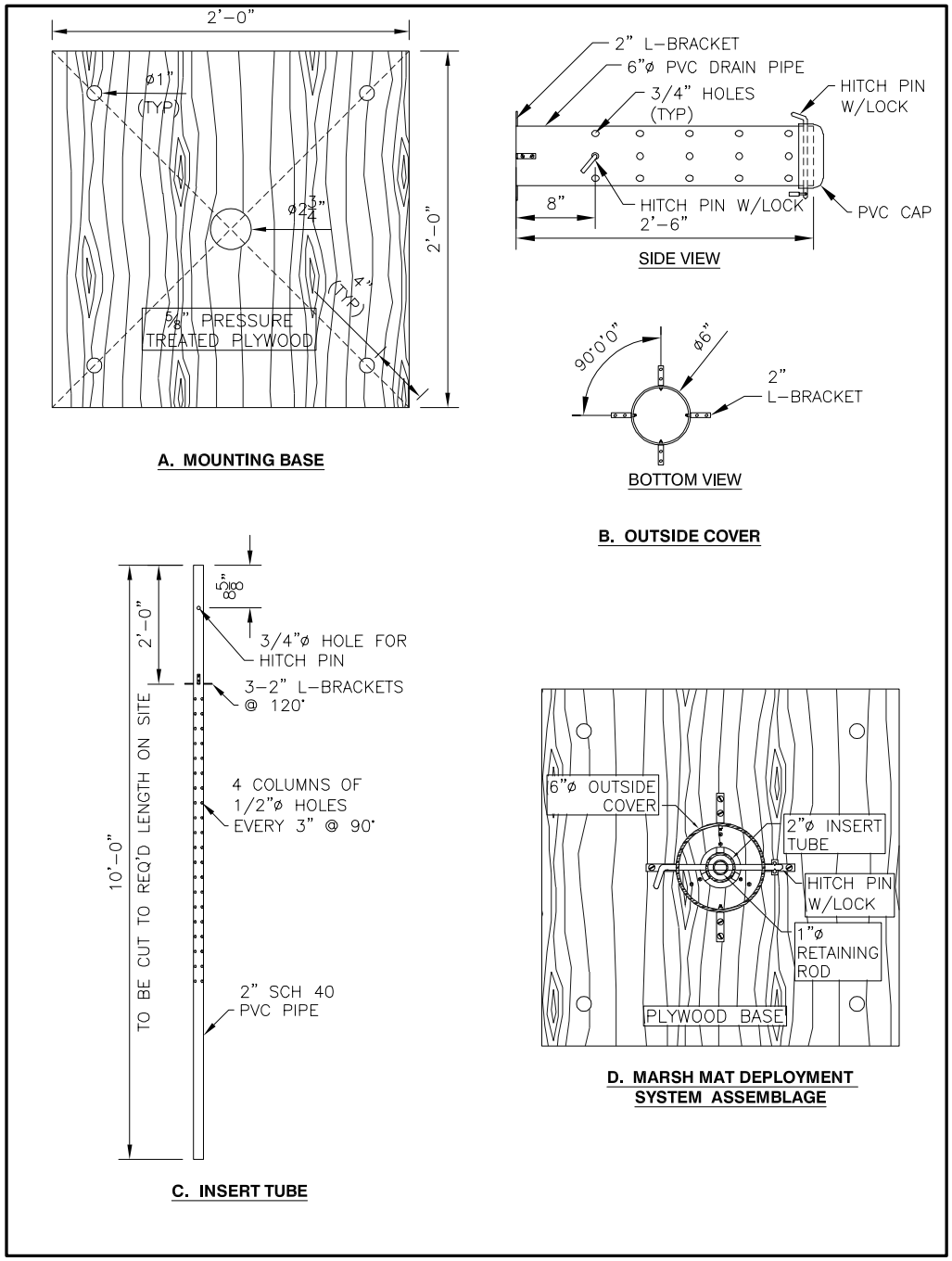

Figure 15: Construction diagram for each individual component of the floating marsh mat recorder.

5. 2” PVC cap
6. PVC glue
7. Brass hitch pins, 2 – 9” long
8. Brass locks, 2 (provided by the LDNR/CRD)
9. 2”x10” or 12”x10’ treated board

Installation

1. The station location for the instrument will be determined by the LDNR/CRD. A site map and site characterization sheet will be provided for the proper installation location.
2. Using the information provided by the LDNR/CRD, locate the station placement around the boardwalk.
3. Place the board on the marsh surface to displace the weight of the person installing the equipment. If two people are establishing the station, the use of two boards will be needed.
4. Using the soil corer or auger, cut a hole in the marsh mat. The hole shall continue through the mat. Note: Remove the soil material from the site so it does not compromise other stations around the boardwalk.
5. Measure the thickness of the marsh mat and record the measurement in a field notebook with the site name, number, and date.
6. Measure the distance from the bottom of the YSI 600XLM or equivalent to the water sensor. Record the instrument make and model and the measurement in a field notebook.
7. Add the two measurements together.
8. With the measurement obtained in step 7, transfer the measurement to the 2” PVC pipe from the bottom of the 2’x2’ board toward the end of the pipe (opposite end of the outside cover).
9. Cut the PVC pipe using the hacksaw or PVC cutter.
10. Glue the 2” PVC cap to the end that was cut in step 9.
11. Place the set-up in the hole such that the 2” pipe goes through the marsh mat and the outside cover remains above the marsh surface.
12. Secure the set-up to the marsh surface using the 4 spiral anchors through the 4 holes in the board at the corners.
13. Using the 1” pipe that was pre-drilled (step 3 of the Retaining Rod section), cut the pipe such that the YSI 600XLM remains in place.
14. If the instrument is not being deployed at this time, lock the retaining rod into place using the brass hitch pin and lock. Then lock the 6” cap using the brass hitch pin and lock.
15. If the instrument is being deployed continue with the ‘Deployment’ section.

Using this method places the water level sensor at the bottom of the marsh mat and the water temperature, specific conductance, and salinity probe slightly below the marsh mat.

The measurement from the marsh surface to the water level sensor is a crucial measurement. It is this measurement that will determine if the water surface is below or

above the marsh surface. This information will be used to calculate the depth and duration of the flooding period. Just as important, this measurement will be used to correlate the water level data from this instrument with the water level data from the continuous recorder in the channel to obtain an elevation datum with respect to the water level and marsh surface.

6.1.1. Deployment and Servicing

Deployment

The owner's manual must be read carefully for the use of the YSI 600XLM or equivalent. While reading the manual, the following sections should be read carefully: probe installation, battery installation, cable installation, software set-up, enabling the sensors, setting the features with respect to instrument going to sleep between readings, and calibrations, how to deploy the instrument properly to take unattended readings, how to service the instrument, and troubleshooting.

The LDNR/CRD requires specific documentation and has implemented its own procedures with respect to the field deployment of the instrument. To facilitate these procedures and documentation, the LDNR/CRD has developed a field data sheet (*Floating Marsh Mat Recorder Calibration Sheet;* Appendix A, Form 12) that shall be used for the deployment and servicing of the continuous recorder. This data sheet (electronic and hardcopy) shall be provided in the form of a template.

Before arriving at the site to deploy the instrument, the instrument must be assembled according to the instructions in the owner's manual. Once the instrument has been assembled correctly, the sensors shall be activated to collect water temperature (°C), specific conductance (µS/cm), salinity (ppt), water level (feet), and battery volts (v). The instrument shall be set-up to record the date (mm/dd/yyyy) with a four digit year, the time in Central Standard Time (hh:mm:ss) using the 24-hour system, and the activation of the sleep mode between readings to conserve the battery power. The instrument may be tested before field deployment to verify that the instrument is working correctly.

During the deployment and servicing phases, two other instruments are needed to obtain data: a field display unit (YSI 650MDS or equivalent) that connects to the YSI 600XLM or equivalent and a hand-held discrete instrument (YSI 30 or equivalent) that displays the water temperature (°C), specific conductance (µS/cm), and salinity (ppt). The owner's manual for both instruments shall be read for clarifications with respect to their operations and functions.

The following procedures shall be used for the YSI 600XLM or equivalent.

1. Connect the YSI 650MDS or equivalent to the YSI 600XLM or equivalent.
2. Using the proper menus and functions, calibrate the instrument's salinity probe with a calibration solution that is very close in concentration to the field

conditions. This calibration shall be performed using the methods provided in the owner's manual.

3. Calibrate the instrument's water level sensor to zero (0) while it is out of the water. NOTE: Record the water level sensor reading in the "Depth Out of Water" box in the 'Clean Reading' section after it has been calibrated. NOTE: It should be 0.000, if it was correctly calibrated and working properly.
4. Using the proper menus and functions, calibrate the hand-held discrete instrument (YSI 30 or equivalent) using the same solution concentration that was used for the YSI 600XLM or equivalent.
5. Using the *Floating Marsh Mat Recorder Calibration Sheet,* record the calibration solution used in the appropriate box. Indicate if the instrument accepted the calibration or if a second calibration was needed.
6. Fill out the top portion of the calibration sheet as it pertains to the deployment of the instrument.
    a. Project and name boxes
    b. Station box
    c. Location box
    d. Date and time (Time recorded in Central Standard Time)
    e. Calibration Instrument (Manufacturer, Model, Serial Number)
    f. Collected By (Names of personnel on the field trip)
    g. Agency (agency, company or organization name)
7. From the boardwalk, remove the brass locks, hitch pins, and the PVC retaining pin.
8. Place the YSI 600XLM instrument into the insert tube and record the water temperature, specific conductance, and salinity in the appropriate boxes under the 'Clean Reading' section on the Constant Recorder line.
9. Remove the YSI 600XLM.
10. Place the YSI 30 or equivalent probe into the insert tube and record the water temperature, specific conductance, and salinity in the appropriate boxes under the 'Clean Reading' section on the Calibration Instrument line.
11. Calculate the specific conductance difference between the two instruments using the following formula:

Specific conductance difference = calibration instrument – constant recorder

12. Place the value with the appropriate sign (positive or negative) in the SpCond Difference box under the 'Clean Reading' section on the Constant Recorder line.
13. Calculate the percent (%) difference:

SpCond Difference (Calculated in step 11) / Calibration Instrument * 100.

Record the absolute value of the number in the % difference box in the 'Clean Reading' section.

14. If the % difference is 5% or greater, then the instrument needs to be recalibrated. If the % difference is less than 5%, then the instrument is ready for deployment. NOTE: (1) Document the results in the appropriate boxes below

the 'Clean Reading' section. (2) Often times the water below the marsh mat gets disturbed with the placement and removal of the YSI 600XLM and YSI 30 causing the % difference to be greater than 5%. If water is available near the station, collect the 'Clean Readings' in the surface water to verify the instrument is not out of calibration. Clean readings are used to verify that the instrument is within calibration and the data is not used to shift data for biofouling.

15. Place the instrument inside the insert tube and secure with the retaining pin, hitch pin and lock.
16. Be sure to attach the proper desiccant tube to the cable.
17. Using the appropriate menus, deploy the instrument using the unattended mode function. In this menu, use the following information for deployment:
    a. Interval: 01:00:00 (every hour, unless otherwise directed by the LDNR/CRD)
    b. Start date: the date of field trip
    c. Start time: the top of the next hour
    d. Duration days: 365 days
    e. File: Project*Month***Station** (Example: CR*10***0319**)
18. The rest of the information in this menu does not require any input. Read the information provided in the menu to verify that the battery volts, battery life and free memory are sufficient. <u>NOTE:</u> The instrument must record for a maximum of 60 days.
19. Select the "Start Logging" function and accept.
20. Before disconnecting the field display unit, record the following information on the data sheet:
    a. Water depth (in the clean water section)
    b. Station and location (deployment section)
    c. Date and time (deployment section)
    d. Battery volts (deployment section)
    e. Constant recorder information (Manufacture, Model, Serial Number)
    f. Deployment filename (deployment section)
    g. Duration and interval (deployment section)
21. Disconnect the field display unit and secure the cap once the cable has been coiled inside of the outside cover.
22. Exit the station without stepping on the marsh surface.

Servicing

The instrument shall be serviced between 30 and 45 days after the deployment date unless otherwise agreed upon by the LDNR/CRD. The servicing of the instrument requires the minimum equipment: a field display unit (YSI 650 MDS or equivalent), a hand-held discrete instrument (YSI 30 or equivalent), a Floating Marsh Mat Recorder Calibration Sheet (Appendix A, Form 12), calculator, pencils, calibration solutions, board (2"x10"x10'), and tools necessary to remove and cleanse biofouling from the sensors and the exterior of the instrument according to the manufacture's specifications.

The following procedures were developed by the LDNR/CRD to ensure the collection of data remains acceptable.

1. Using the procedures specified in the owner's manual, calibrate the YSI 30 or equivalent using a solution concentration that is close to the conditions in the field. Record the solution concentration in the comments section of the data sheet. NOTE: Discard the calibration solution after use.
2. Place the board next to the instrument, if it does not exist.
3. From the board, unlock the brass lock and remove the hitch pin and cap.
4. Connect the field display unit to the cable of the YSI 600XLM or equivalent.
5. Stop the YSI 600XLM or equivalent from logging.
6. In the date and time box on the calibration sheet, record the date and time (Central Standard Time, 24-hour) from a watch.
7. In the sonde date and time box on the calibration sheet, record the date and time from the YSI 600XLM or equivalent. NOTE: If the two times vary by more than 5 minutes, then the time on the YSI 600XLM or equivalent shall be adjusted using the proper procedures outlined in the owner's manual.
8. Complete the top section of the data sheet as it relates to the project name, station, basin/location, instrumentation, field personnel, and agency.
9. Download the file from the YSI 600XLM to the field display unit.
10. Record the downloaded file name and the number of samples in the file in the appropriate boxes on the top section of the calibration sheet.
11. When the file has finished downloading, document if it was successful by placing a "Y" for yes or "N" for no.
12. Collect a dirty in situ discrete reading using the appropriate menus and functions. The following information shall be recorded on the calibration sheet under the 'Dirty Reading' section on the constant recorder line: temperature (°C), specific conductance (µS/cm), salinity (ppt), and water depth (feet).
13. Record the battery volts in the top section of the calibration sheet in the "dirty battery volts" box.
14. Remove the retaining pin and instrument from the insert tube and place on the side.
15. Read the depth reading while the instrument is out of the water and in a vertical position. Place the depth reading in the "Depth Out of Water" box in the 'Dirty Reading' section.
16. Place the probe of the YSI 30 or equivalent into the insert tube.
17. Record the following readings in the 'Dirty Reading' section on the calibration instrument line: temperature (°C), specific conductance (µS/cm), and salinity (ppt).
18. Calculate the specific conductance difference:

Specific conductance difference = calibration instrument – constant recorder.

19. Place the value with the appropriate sign (positive or negative) in the "SpCond Difference" box under the 'Dirty Reading' section on the constant recorder line.
20. Calculate the percent (%) difference:

Specific conductance difference (Step 18) / Calibration Instrument * 100.

Record the absolute value of the number in the % difference box in the 'Dirty Reading' section.

21. Clean the exterior and sensors of the YSI 600XLM or equivalent using the instructions provided in the owner's manual.
22. Determine if the remaining battery voltage is sufficient to run the instrument until the next servicing date. If the battery voltage is not sufficient, then change the batteries according to the instructions provided in the owner's manual. NOTE: Indicate a "Y" for yes or a "N" for no in the "Battery Changed" box in the 'Deployment section.'
23. Place the YSI 600XLM or equivalent into the insert tube and record the following readings in the 'Clean Reading' section on the constant recorder line: temperature (°C), specific conductance (µS/cm), and salinity (ppt).
24. Remove the YSI 600XLM or equivalent from the insert tube.
25. Place the probe of the YSI 30 or equivalent into the insert tube and record the following readings in the 'Clean Reading' section on the calibration instrument line: temperature (°C), specific conductance (µS/cm), and salinity (ppt).
26. Calculate the specific conductance difference for the clean:

Specific conductance difference = calibration instrument – constant recorder.

27. Place the value with the appropriate sign (positive or negative) in the "SpCond Difference" box under the 'Clean Reading' section constant recorder line.
28. Calculate the percent (%) difference:

Specific conductance difference (Step 26) / Calibration Instrument * 100.

Record the absolute value of the number.

29. If the % difference is 5% or greater, then the YSI 600 XLM or equivalent needs to be calibrated with respect to salinity. Note: Often times the water below the marsh mat gets disturbed with the placement and removal of the YSI 600XLM and YSI 30 causing the % difference to be greater than 5%. If water is available near the station, collect the 'Clean Readings' in the surface water to verify the instrument is not out of calibration. Clean readings are used to verify that the instrument is within calibration and the data is not used to shift data for biofouling.
30. If the % difference is less than 5%, then the instrument does not need calibration with respect to salinity. NOTE: Document "Y" for yes or "N" for no in the "Calibration Required" box. If yes, then place the solution concentration value in the "Standard (µS/cm)" box.
31. With the instrument out of the water and in a vertical position, calibrate the depth sensor to zero (0) using the appropriate menus and functions. Record the water level reading in the "Depth Out of Water" box in the 'Clean Reading' section once the instrument has been calibrated. NOTE: It should read 0.000 if the calibration was accepted and the instrument is working properly.
32. Place the instrument inside the insert tube and secure with the retaining pin.

33. Inspect the desiccant tube and change, if necessary. NOTE: Indicate a "Y" for yes or a "N" for no in the "Desiccant Changed" bubble.
34. Using the appropriate menus, deploy the instrument using the unattended mode function. In this menu, use the following information for deployment:
    a. Interval: 01:00:00 (every hour, unless otherwise directed by the LDNR/CRD)
    b. Start date: the date of the field trip
    c. Start time: the top of the next hour
    d. Duration days: 365 days
    e. File: Project*Month***Station** (Example: CR*10***0319**)
35. The rest of the information in this menu does not require any input. Read the information provided in the menu to verify that the battery volts, battery life and free memory are sufficient.
36. Select the "Start Logging" function and accept.
37. Before disconnecting the field display unit, record the following information on the data sheet:
    a. Water depth (in the 'Clean Water' section)
    b. Station and location ('Deployment' section)
    c. Date and time ('Deployment' section)
    d. Battery volts ('Deployment' section)
    e. Constant recorder information (Manufacture, Model, Serial Number)
    f. Deployment filename ('Deployment' section)
    g. Duration and interval ('Deployment' section)
38. Disconnect the field display unit and secure the cap once the cable has been coiled inside of the outside cover using the brass hitch pin and lock.
39. Exit the station without stepping on the marsh surface.

In the 'Notes' section, briefly describe the condition of the area with respect to any noticeable changes that may have occurred since the last trip. Document the water level in relation to the marsh surface and about how many inches above or below the marsh surface the water level is at the time of servicing. Document if there was any vandalism or problems with the boardwalk, accretion stations, vegetation stations, or anything associated with the data collection efforts at the site.

6.1.2. Data Processing

Data processing for the floating marsh mat system is very similar to the process used for the continuous water level and salinity recorders. However, the main difference is that the floating marsh system uses the data from a near-by continuous recorder that is deployed in a deep water channel and possesses an elevation mark. Unlike the continuous recorder station in the deep water, the floating marsh mat system does not possess an elevation mark; consequently, the water elevation data is used to convert the water level data to a datum and to calculate the elevation of the marsh surface by knowing the difference between the marsh surface and the water level sensor.

The LDNR/CRD has implemented a two phase protocol for data processing. These two phases are referred to as data entry (Phase I) and data quality assurance / quality control (Phase II). These two phases are conducted by separate individuals to assure that the final product is in 100% agreement with the data collected during the field sampling procedure. The procedures in this section are very similar to the water level and salinity chapter procedures; however, this procedure utilizes data from another instrument. Consequently, detailed procedures have been described to eliminate confusion.

Data Entry (Phase I)

The data entry phase includes entering all water temperature, specific conductance, salinity and water level data since the instrument collects each of these variables. To properly process the data from its field format to its final quality assurance / quality control (QA/QC) format, several files are needed:

1. Raw data file (.dat) from the field display unit.
2. Raw data file (.csv) from the YSI software (EcoWatch or equivalent) for continuous recorder data.
3. YearHour (.xls) provided by the LDNR/CRD to verify date and times.
4. Mat-qc (.xls) template provided by the LDNR/CRD to import the raw data for shifting and quality assurance.
5. Excel file that contains the data from the near-by water level and salinity continuous recorder.
6. Station history (.xls) template provided by the LDNR/CRD to record any information regarding the station, data, or instrumentation at the site.
7. Field trip report (.doc) template provided by the LDNR/CRD to document what occurred during the installation, deployment and/or servicing of the station.

Complete the procedure below using the electronic files to properly process the data obtained from the field.

1. Copy the "Deployment Date and Time" of the file that was downloaded from the field from the previous calibration sheet's 'Deployment' section.
2. Photocopy the calibration sheet used in the field. The original sheet shall be filed systematically until both phases are complete and the LDNR/CRD has accepted the final product. The photocopy becomes the working copy throughout the QA/QC process.
3. Download the raw data from the field display unit or equivalent to a personal computer (pc) that has the appropriate software (Ecowatch for YSI 600XLM or equivalent package) which formats the data into a graph and table and is capable of exporting the data to a comma delimited text file (.csv). The PC should also have the software Excel.
4. Open the downloaded file for viewing and formatting in Ecowatch or equivalent.
5. Using the appropriate functions of the software, arrange the data in the following order: date (mm/dd/yyyy), time (hh:mm:ss), temperature (°C),

specific conductance (µS/cm), salinity (ppt), water depth (ft), and battery volts (v).

6. Use the statistical function of the software package to check for any obvious problems with the data. NOTE: Minimum and maximum values are excellent indicators of outliers in the data.
7. Export the file as a comma delimited text (.csv) using the same name as the data file.
8. Open the Excel spreadsheet "YearHour," provided by the LDNR/CRD and open the comma delimited text file of the data that was exported in step 6.
9. In the comma delimited text file, insert a column next to the date and time column and copy the appropriate time frame from the "YearHour" spreadsheet.
10. Inspect the comma delimited text file for any missing dates and times. If any dates and times are missing, then they shall be added in the appropriate places and the data cells left blank. Note: If an hour was missing because of servicing, then it should be added to the end of the file.
11. Open the template Excel file "Mat-Qc", provided by the LDNR/CRD, and save it as an Excel file with the downloaded raw data file name and the .xls extension. This Excel template contains 4 worksheets:
    a. "Marsh Mat Data": Enter the data from the calibration sheet in this worksheet. Formulas determine if the data needs to be shifted because of biofouling on the continuous recorder. This worksheet contains three areas: the top area requires the input of data from the "Continuous Recorder Calibration Sheet" that was completed in the field. All the cells with the red font require a change and the information/data are obtained from the calibration sheet. On the lower portion of the spreadsheet, the raw data are pasted. They are shifted for biofouling and converted to NAVD 88, Feet. Statistical summary and percent completeness calculations are located on the right side of the worksheet.
    b. "Sonde Data": This worksheet is used to paste the values of the continuous recorder data from the instrument that is in the open water or marsh channel near the marsh mat recorder. It is this worksheet that allows the water elevation and marsh surface elevation to be calculated.
    c. "Marsh Mat Oracle": This worksheet puts the data from the "Data" worksheet into the appropriate format for the LDNR/CRD main database. Any erroneous data that are deleted from the shifted section of the data worksheet will appear as a zero value in the Oracle worksheet. These zero values must be deleted.
    d. "Graphs": This worksheet contains three separate graphs that show different relationships with respect to the data that were collected. These graphs are used to find outliers in the data set as well as to view the trends of the environmental conditions with respect to salinity, water elevations, and marsh surface elevations.
12. Click on the "Marsh Mat Data" worksheet tab at the bottom of the file.
13. Change all the red font information in the upper portion of the worksheet to correspond with the data on the calibration sheet.

14. Copy the data from the comma delimited file. Using the paste special feature, only paste the values in the appropriate cells on the lower section of the worksheet.
15. Click on the "Sonde Data" worksheet.
16. Open the continuous recorder Excel data file that corresponds with the station. This instrument is located in the open water or marsh channel in close proximity to the marsh mat recorder.
17. Copy the data from the "Data" worksheet. Using the paste special feature, paste the data as values into the "Sonde Data" worksheet of the Marsh Mat data file. Remember: The format must remain the same and the date and times must coincide with those in the "Marsh Mat Data" worksheet.
18. Change all the red font information on the "Sonde Data" worksheet to correspond with the information on the corresponding continuous recorder spreadsheet.
19. Close all the files except the working Excel file with all the data.
20. Delete the extra lines at the end of the "Marsh Mat Data" and "Marsh Mat Oracle" worksheets. The template is designed for larger data sets.
21. Change the graphs on the "Graphs" worksheet so that the data extends the entire graph. This is accomplished using the Source Data function for the graphs.
22. Change the title of the graphs to correspond with the project name, station number, and dates of the data presented in the graphs.
23. Examine the graphs for any data that may be outliers and decide if the data needs to be kept or voided. Any data that is voided needs to be documented in the "Site History" spreadsheet provided by the LDNR/CRD.
24. In the Marsh Mat Data worksheet, change the heading of the Summary Statistics page to correspond with the project name, station number, dates and times of the data.
25. Be sure to save the Excel file after this step and through out the other steps.

Technically the data entry is complete; however, the data must be examined for quality assurance. During this process the first data line must be compared to the previous calibration sheet to verify that the data are similar to the data collected by the instrument during the clean readings. Secondly, the last data must be examined to verify that the data collected by the calibration instrument is close to one another. Thirdly, if a shift was applied to the salinity and water level readings, it must be determined if these shifts are accurate with respect to what was collected in the field. Lastly, the transition between the data in the previous month's file and the data in the current file needs to be verified. The technician will compare the last two weeks of data from the previous file (if one exists) to the data in the beginning of the current file to verify that the transition is smooth, the pattern is similar, and there are no missing data.

Once the Excel spreadsheet is complete with respect to the data, the "Site History" Excel file (provided by the LDNR/CRD) must be completed and updated with respect to all the pertinent worksheets:

1. Site – Data History: This worksheet shall be updated every time the site/project is visited. This worksheet will provide a history for site visits as well as the dates data was voided and the reason for voiding the data.
2. CR Deployment_Removal: This worksheet tracks the make, model, and serial number of each continuous recorder at each station. When the instrument is removed from the field this worksheet needs to reflect the change by completing the Date Removed, Time Removed, and Notes columns. Then another line shall be added that contains the information regarding the instrument that was deployed in the previous instruments place. This provides a method for property control for the department with respect to the instrumentation.
3. Recorder Elevations: Any updates or changes that may have occurred as a result of changing instruments or other problems must be documented. Examples may include, but are not limited to the following:
    a. Raising of an instrument because sediment may have settled around the sensors. Consequently, the 'Mark to Sensor Distance' would change which would ultimately change the 'Sensor Elevation.'
    b. If another survey was performed and a discrepancy was found between the previous survey and the more recent survey.
    c. If another station was established because the other station was destroyed for any reason and the instrument was either not found or the station can no longer support a continuous recorder.

Once the Excel files have been completed, a field trip report must be generated. The field trip report must include: 1) field personnel and their respective agency, company, or organization on the trip, 2) purpose of the trip, 3) general weather conditions, 4) sites that were sampled, 5) type of sampling that took place, 6) an explanation of any logistical problems encountered in the field, especially problems that may affect the data, 7) any notable biological activity or physical activity that may have altered the site, and 8) details of when and where the calibration instrument was calibrated and the solution used.

When the Excel files and field trip report have been completed, the technician must compile a quality assurance (QA) / quality control (QC) packet. This packet shall include:

1. the appropriate QA/QC checklist (Appendix A, Form 8) cover sheet
2. field trip report
3. photocopied "Continuous Recorder Calibration Sheet(s)" (depends on the number of stations in a packet)
4. graphs printed from the Excel file "Graphs" worksheet
5. summary statistics and percent completeness calculations printed from the Excel file 'Data' worksheet

The QA/QC packet and associated Excel files are sent to another individual for further examination and verification. This individual is referred to as the QA/QC officer.

Quality Assurance / Quality Control (Phase II)

The QA/QC officer immediately dates the packet upon receipt. Then the QA/QC officer will read the field trip report and provide grammatical corrections, suggest clarifications, and comment as it pertains to the information on the data sheet. The QA/QC officer then examines the data sheet(s) for completeness and accuracy regarding the sections where calculations were performed in the field. The QA/QC officer must examine the Excel data file for any erroneous data that are questionable. If mistakes or questions arise, then documentation must occur on the QA/QC checklist. At times it may be beneficial to place removable notes (e.g., Post-it® notes) on the photocopied data sheet.

The QA/QC officer also checks several worksheets in the "Site History" file to verify that the information regarding the deployment and removal of instruments is complete as well as the worksheets with respect to the missing or voided data associated with the station.

Once the packet and files have been reviewed, the QA/QC officer shall initial and date all portions of the QA/QC checklist that is in accordance with the questions provided on the QA/QC checklist. Those areas that possess errors or have presented questions shall be addressed by the person responsible for Phase I.

Once the data collector has corrected or answered the problems found by the QA/QC officer, the QA/QC packet is again delivered to the QA/QC officer. The QA/QC officer examines the questions and verifies that all the data and information is 100% correct. This process will continue until all the corrections have been made and all the questions have been answered to the satisfaction of the QA/QC officer. Upon acceptance of the packet, the QA/QC officer will initial and date the rest of the QA/QC checklist.

After the QA/QC packet has been finalized, the data collector must obtain the original data sheets. If problems were found with the data sheet(s) during the QA/QC process, then the original data sheets must be corrected. This process shall be carried out by using a black ball point ink pen. No one shall erase any data or information on the original data sheet. The proper procedure will be to draw a single line through the error and place the correction as close to the error as possible. The person will also place their initial and the data next to the correction.

6.1.3. <u>Summary Data and Graphics</u>

At this time, the Restoration Technology Section of the LDNR/CRD has not developed a storage database with respect to the marsh mat continuous recorder data. Consequently, the storage media at this time shall be "yearly" Excel files. A template shall be provided by the LDNR/CRD. This template will allow all the monthly file data to be transferred to another file that will contain all the data collected for a year. This data transfer will take place once it has been determined by the QA/QC officer that the data is 100% accurate and no changes will take place to the data.

The "yearly" file shall be assembled on a monthly basis after the second successive data acquisition has occurred and the data has been QA/QC'ed; consequently, there will be a one month data lag between the "yearly" file and the QA/QC packet. The monthly data from the Oracle worksheet will be copied to the "yearly" Oracle worksheet. This will allow all the information to be stored in one file until the database is established. This file will also have a graphs worksheet that will allow the data to be shown with several data acquisition packets. This serves as another QA/QC measure by allowing the data to be presented over a longer period of time.

Upon completion, the summary statistics and percent completeness from the Oracle worksheet along with the three graphs from the graphs worksheet shall be printed. This information will be delivered to the LDNR/CRD upon completion along with the electronic files.

6.1.4. Deliverables

Upon completion of the QA/QC process and the creation of the summary data and graphics, the original data sheet(s), the field trip report, the QA/QC packet, and all the associated electronic files shall be delivered to the LDNR/CRD. Electronic files containing the data shall be in the appropriate deliverable format (Appendix B, Format 3) once the data has completed the QA/QC process.

Twice per year (January and July), the previous 6-months (July) or 12 months (June) of QA/QC'ed, stored data shall be graphed from the "yearly" file. With these data, summary graphics shall be produced to show the entire period of salinity, water level, and depth and duration of marsh flooding data. With the yearly data, summary statistics and percent completeness with respect to the analysis used in the monthly packets shall be performed and printed with the graphs and provided to the LDNR/CRD.

6.2. Static System

The static system of measuring the vertical movement of floating marsh mats is utilized when the marsh mat has been classified as a thin mat and will not support the weight of the floating system. This system uses an Ott-Thalimedes or equivalent instrument which is a data logger, float-counterweight, and pulley operated shaft encoder. This instrument has a measuring range of ±19.99 meters (65.58 feet) with a maximum measuring error of ±0.002 meters. The instrument can communicate via a contact free IrDA-interface, a notebook or PC, palmtop, an OTT field display unit, or remote data transmissions via a RS232 interface.

Utilizing the Ott-Thalimedes or equivalent instrument only measures the vertical movement of the marsh surface without the collection of water temperature, specific conductance, and salinity. The float is removed and replaced with an auger that is attached to the marsh surface. As the marsh surface moves vertically, the cable rotates around the pulley system and sends a digital signal to the data logger that is recorded and

stored until the instrument is serviced. The following sections describe how the instrument is deployed in the field and utilized for measuring vertical marsh movement.

6.2.1. Field Station Establishment

The station is established using an aluminum post or equivalent material that has a hollow center and can be driven through the marsh mat and into the underlying substrate until resistance is met. This provides a stable environment for the attachment of the housing compartment (Figure 16) and pulley cable extension arm. The housing and extension arm is an aluminum platform and cover or equivalent material that attaches to the top of the post and protects the instrumentation from weather and vandalism. The arm allows for the cable to attach to the marsh away from the pipe. Figure 17 is a schematic of how the post and housing are assembled during installation.

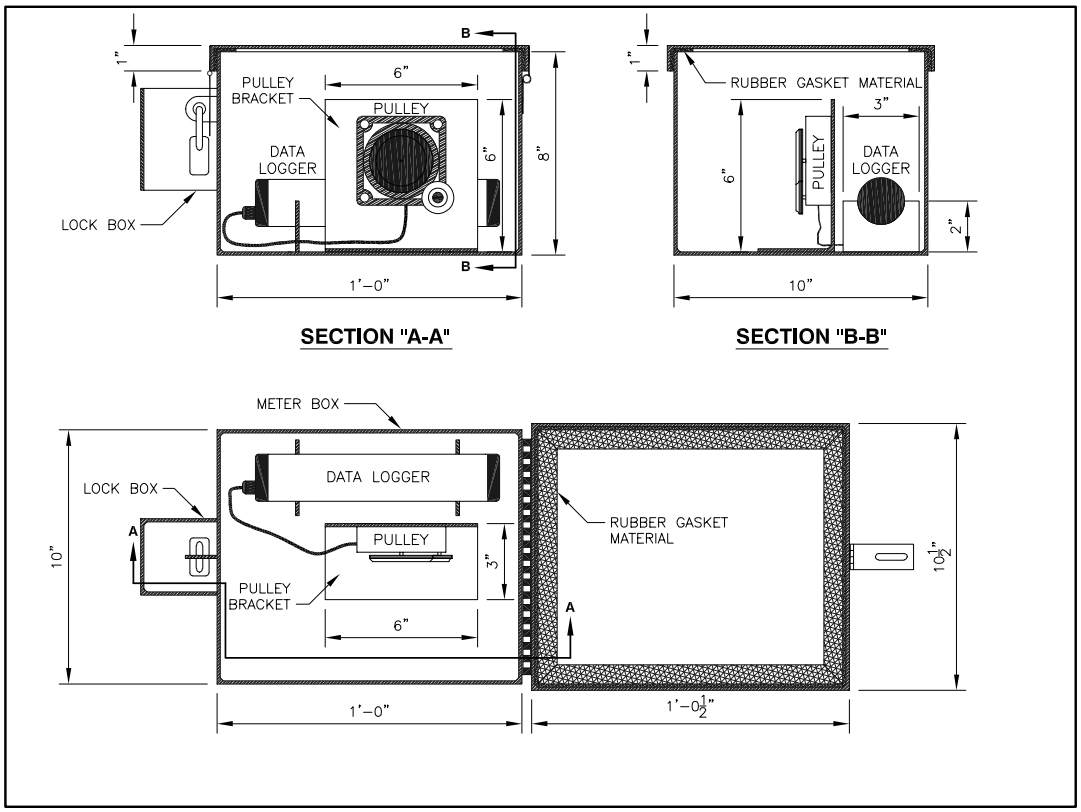

Figure 16: Construction drawing for the instrument housing unit used on the static marsh mat continuous recorder system.

The following are recommended procedures for the establishment of the station.

1. From the boardwalk, cut a hole in the marsh mat the size of the post using a soil auger or coring tube. Remove all material extracted through this process well away from the site.
2. Place the post in the hole. NOTE: The post shall be with an open end; however, the post shall remain high enough above the marsh surface such that the counter weight does not rest upon anything in the tube during deployment or servicing. If the counter-weight touches anything inside the post it may adversely affect the readings.
3. Using the person's weight drive the post into the underlying substrate as deep as possible while maintaining plumb.
4. Using a widow-maker or similar device, drive the post into the substrate until resistance is met. NOTE: A protective cap or covering shall be used on the post to prevent any damages from the pounding. If any damage has occurred during the installation process, cut the damaged portion off squarely so that the platform will rest perpendicular on the post.
5. Once the post is secured and remains a minimum of four feet above the boardwalk, drill a ¼" hole in the pipe closes to the boardwalk approximately 8-10" from the top. This hole will serve as an elevation mark for the instrument.
6. Attach 4 brackets to the top of the pipe in a manner that allows the housing to mount flush on the top of the pipe.
7. Secure the housing to the pipe using the brackets and bolts according to the schematic. NOTE: The housing shall be secured to facilitate the ease of servicing the instrument while also placing the cable and auger the maximum distance from the pipe.

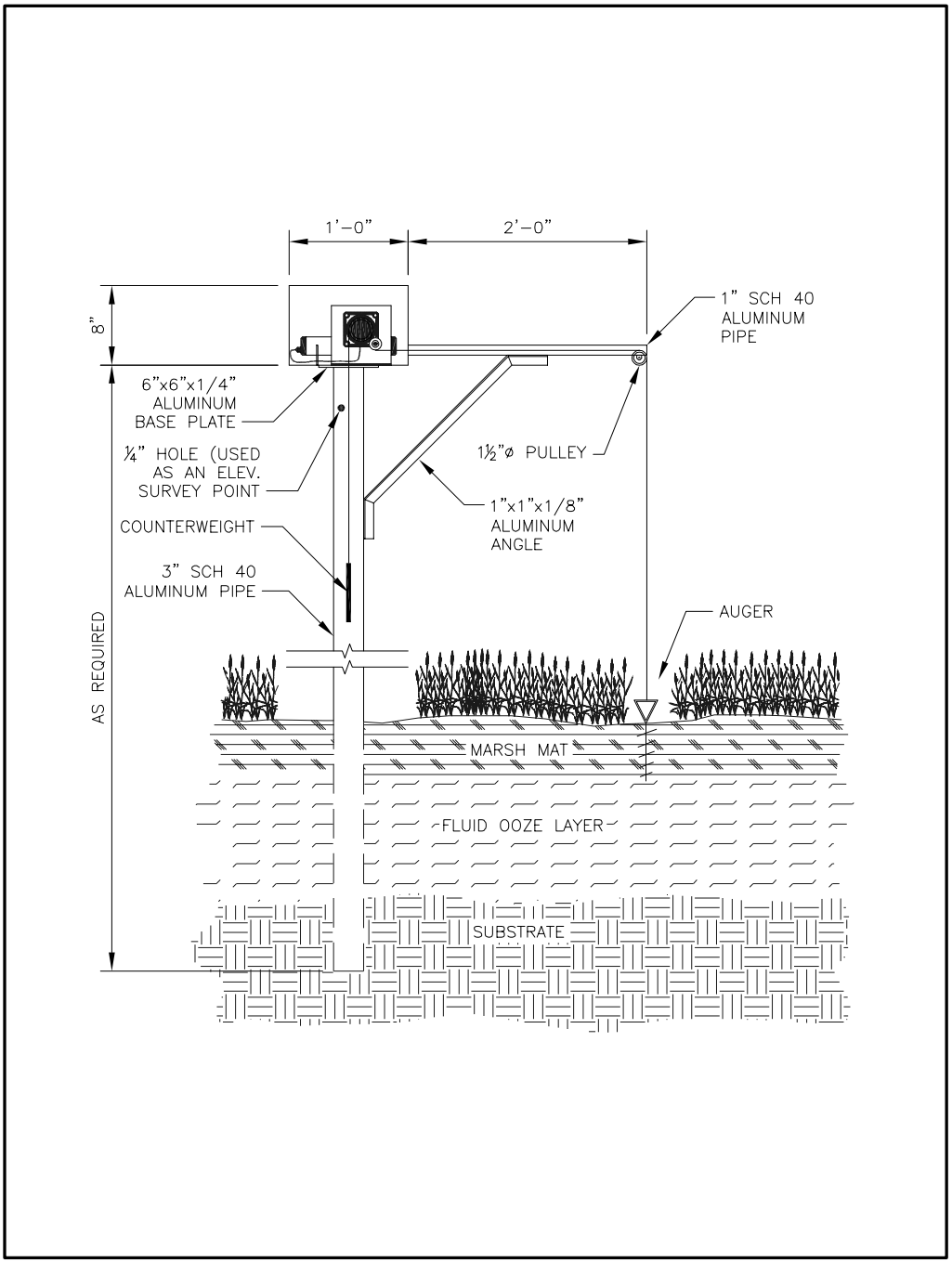

Figure 17: Schematic of a static marsh mat continuous recorder station.

6.2.2. Deployment and Servicing

Deployment

The following equipment is needed to deploy the instrument: data sheet (Static Marsh Mat Recorder Calibration Sheet; Appendix A, Form 13), pencil, watch, field notebook, counterweights (for initial deployment), surveyor's measuring rod, engineer's measure tape graduated to tenths and hundredths, level, batteries, field servicing instrument, tools to replace the instrument if a problem occurs, and calculator.

1. From the boardwalk, unlock the housing on the platform to access the brackets and holes for the instrument.
2. Mount the bracket to the housing platform if one does not exist.
3. Mount the pulley system on the bracket in the housing.
4. Assemble the counterweight, cable, and auger according to the instructions provided in the owner's manual. Consult the owner's manual for the amount of weight needed for the counterweight.
5. Secure the spiral auger to the marsh surface, a minimum of 12 inches from the pipe. Make sure the cable is 90 degrees to the arm and 90 degrees to the marsh surface (i.e., the cable must be perpendicular to the surface).
6. Insert the battery into the instrument according to the instructions provided in the owner's manual.
7. Using the procedures stated in the owner's manual, set the instrument to log the following data: date, time (set up for the Central Standard Time), measured value (feet) using the Level Measurement feature, and battery voltage. The recorder shall record a reading every hour on the hour.
8. The instrument has two modes for measuring the vertical movement. Each mode has its advantages and disadvantages; however, LDNR/CRD data shall be collected using the **Level Measurement** mode.
    a. Depth measurement: As the water level (marsh surface) increases, the measured value decreases and as the water level (marsh surface) decreases, the measured value increases.
    b. Level measurement: As the water level (marsh surface) increases the measured value increases and as the water level (marsh surface) decreases, the measured value decreases. NOTE: If the platform has a known elevation at the time of deployment, then this mode shall be used. The instrument shall be set to record the actual marsh elevation. Therefore, no correction factor would have to be applied to the data unless the instrument drifts off of calibration. The data would be recorded with respect to the NAVD 88 elevation datum.
9. Using the surveyor's measuring rod or engineer's measuring tape, measure the distance from the mark elevation to the surface of the marsh surface. Record this value on the data sheet in the 'Clean Reading' section.
10. Calculate then record the Marsh Surface Elevation by subtracting the measured distance (step 9) from the Mark Elevation that was determined by a professional surveyor.

11. Set the instrument to the Marsh Surface Elevation (NAVD 88, Feet) which was calculated in step 10.
12. Fill out all the information on the top portion of the data sheet.
13. Record the staff gauge reading in the 'Notes' section.
14. Fill out the 'Deployment' section once the instrument has been completely set-up for the data collection.

Servicing

The minimum amount of equipment that is needed to service the instrument is as follows: data sheet, pencil, watch, field notebook, surveyor's measuring rod, engineer's measuring tape, field servicing instrument, tools to replace the instrument if a problem occurs, calculator, and boards.

The following procedures are recommended to ensure the accuracy of the data.

1. Visually inspect the site from a distance and document any problems on the data sheet in the 'Notes' section (i.e., any slack in the cable or the auger is out of the marsh surface).
2. Place a board (2"x10"x10') on the tooth, if a board was not left at the site.
3. Unlock the housing from the platform to expose the instrument and pulley system.
4. Visually inspect the instrument and pulley system to verify that all the working parts are in the proper place and tension remained on the pulley. Record any problems.
5. Record the project name, station number, location, date and Central Standard Time (24-hour convention) from a time piece other than the instrument, field personnel, agency, continuous recorder manufacturer and model, and serial number on the top section of the data sheet.
6. From the instrument, record the date and time and dirty battery volts in the top section of the data sheet.
7. Record the measured value from the instrument which corresponds to the marsh surface elevation in the 'Dirty Readings / Measurements' section for the continuous recorder.
8. Manually determine the marsh surface elevation by measuring the distance from the "Mark Elevation" (top of ¼" hole) to the marsh surface. Record this value in the "Measured Distance box of the 'Dirty Readings / Measurements' section.
9. Calculate the "Marsh Surface Elevation" by subtracting the "Measured Distance" from the "Mark Elevation." Record this value in the "Mash Surface Elevation" box in the "Manual Measurements" line.
10. Calculate the Marsh Surface Elevation Difference by using the formula: **Manual Measurements (Marsh Surface Elevation) – Constant Recorder (Marsh Surface Elevation)**.

    Record this value in the Marsh Surface Elevation Difference Box.
11. Calculate the % Difference by using the formula:

    "Marsh Surface Elevation Difference" (step 10) / Manual Measurements (Marsh Surface Elevation) * 100.

Place the value in the "% Difference" box.

12. Download the instrument using the procedures set forth in the owner's manual. Record if the download was completed and successful.
13. Decide whether the battery volts are sufficient to properly power the instrument until the next servicing period. If the battery volts are not sufficient, replace the battery using the procedure set forth in the owner's manual.
14. Perform a precision check by rotating the pulley a known distance and seeing if the value changes by the known distance.
    a. Record the known distance of the pulley rotation in the box in the 'Pulley Precision Check' section.
    b. Record the measured level value before the pulley is rotated in the "Before" box.
    c. Rotate the pulley the known distance.
    d. Record the measured level value after the pulley is rotated in the "After" box.
    e. Calculate the difference between the two readings using the formula:

       "After" – "Before"

       Record the value in the "Difference" box.
    f. Calculate the % difference using the formula:

       Difference (value in step 13e) / "Known Pulley Distance" * 100

       Record the absolute value in the appropriate box.
    g. If the values are within the acceptable range (according to the owner's manual), check the "Yes" box. If the values are not within the acceptable range (according to the owner's manual), check the "No" box. <u>NOTE:</u> If the values are out of the acceptable range, then the instrument needs to be replaced since it has to be sent in for repairs.
15. Clean readings.
    a. Measure the distance from the "Mark Elevation" to the surface of the marsh surface. Record this value in the "Measured Distance" box of the "Manual Measurements."
    b. Calculate the "Marsh Surface Elevation" by subtracting the "Measured Distance" from the "Mark Elevation." Record this value in the "Marsh Surface Elevation" box in the "Manual Measurements" line.
    c. Set the instrument to read the "Marsh Elevation."
    d. Record the measured level value from the instrument.
    e. Calculate the difference by using the formula:

       "Marsh Surface Elevation (Manual Measurements – "Marsh Surface Elevation" (Constant Recorder)

       Place the value in the "Marsh Surface Elevation Difference" box of the 'Clean Reading' section.
    f. Calculate the % Difference by using the formula:

       "Difference" (step 15e) / "Marsh Surface Elevation" (Manual Measurements) * 100.

       Place the value in the "% Difference" box.
    g. If the values are off, adjust the reading such that they are the same.
    h. Record the measured value on the instrument after the adjustment has been made on the data sheet.

   i. Record if the battery was changed.
16. Deploy the instrument according to the instructions provided in the owner's manual.
17. Record the date, time, continuous recorder manufacturer and model, and serial number in the 'Deployment' Section.
18. Secure the instrument with the housing and lock.
19. Read the nearest staff gauge and record in the 'Notes' section.
20. In the 'Comments/Notes' section, describe the site with respect to the water level as it relates to the marsh surface. The condition of the emergent vegetation, and any changes that has occurred since the last visit, any damages to the boardwalk or other stations with respect to the site.
21. Exit the site.

6.2.3. Data Processing

The LDNR/CRD has implemented a two phase protocol for data processing. These two phases are referred to as data entry (Phase I) and data quality assurance / quality control (Phase II). These two phases are conducted by separate individuals to assure that the final product is in 100% agreement with the data collected during the field sampling procedure.

Data Entry (Phase I)

1. Photocopy the calibration sheet used in the field. The original sheet shall be filed systematically until both phases are complete and the LDNR/CRD has accepted the final product. The photocopy becomes the working copy throughout the QC process.
2. Download the raw data from the field display unit or equivalent to a personal computer (pc) that has the appropriate software (Excel).
3. Open the downloaded file for viewing and formatting in Excel.
4. Using the appropriate functions of Excel, arrange the data in the following order and format: date (mm/dd/yyyy), time (hh:mm:ss), measured level (water level/marsh surface) (ft), and battery volts (v).
5. Open the Excel spreadsheet "YearHour," provided by the LDNR/CRD.
6. In the raw data file, insert a column next to the date and time column and copy the appropriate time frame from the "YearHour" spreadsheet.
7. Inspect the raw data file for any missing dates and times. If any dates and times are missing, then they shall be added in the appropriate places and the data cells left blank.
8. Open the template Excel file "Vertical Mat-Qc", provided by the LDNR/CRD, and save it as an Excel file with the naming convention: project*month***stationnumber** and the .xls extension (e.g., CR*10***0398)**. This Excel template contains 4 worksheets:
   a. "Marsh Mat Data": This worksheet contains three sections: (1) the upper section—station information and instrument information is documented and the data that was collected in the field is entered into

the corresponding cells which is used to apply the shifts for biofouling, (2) the lower section—is where the data is pasted from the comma delimited file once it has been inspected for missing dates and times; it is where the data is shifted and adjusted for biofouling, and (3) the right section—contains formulas that give a summary statistics of the data that was collected and gives a percent completeness for all the variables collected.

b. "Sonde Data": This worksheet is used to paste the values of the continuous recorder data from the instrument that is in the open water or marsh channel near the marsh mat recorder. This worksheet provides the water elevation which will be used to calibrate flood depth and duration.

c. "Marsh Mat Oracle": This worksheet is used to copy the data to a yearly file that is produced to view the data during a specific time period. It will be used later to input the data into the LDNR/CRD main database system.

d. "Graphs": This worksheet contains two separate graphs that show different relationships with respect to the data that was collected. These graphs are used to find outliers in the data set as well as to view the trends of the environmental conditions with respect to water elevations, and marsh surface elevations.

9. Click on the "Marsh Mat Data" worksheet tab at the bottom of the file.
10. Change all the red font information in the upper portion of the worksheet to correspond with the data on the calibration sheet.
11. Copy the data from the comma delimited file. Using the paste special feature, only paste the values in the appropriate cells on the lower section of the worksheet.
12. Click on the "Sonde Data" worksheet.
13. Open the continuous recorder Excel data file that corresponds with the station. This instrument is located in the open water or marsh channel in close proximity to the marsh mat recorder.
14. Copy the data from the "Data" worksheet. Using the paste special feature, paste the data as values into the "Sonde Data" worksheet of the Marsh Mat data file. Remember: The format must remain the same.
15. Change all the red font information on the "Sonde Data" worksheet to correspond with the information on the continuous recorder spreadsheet.
16. Close the continuous recorder, raw data file, and "YearHour" files.
17. Delete the extra lines at the end of the "Marsh Mat Data" and "Marsh Mat Oracle" worksheets. The template is designed for larger data sets.
18. Change the graphs on the "Graphs" worksheet so that the data extends the entire graph by using the Source Data function for the graphs.
19. Change the title of the graphs to correspond with the project name, station number, and dates of the data presented in the graphs.
20. Examine the graphs for any data that may be outliers and decide if the data needs to be kept or voided. Any data that is voided needs to be documented in the "Site History" spreadsheet.

21. In the "Marsh Mat Data" worksheet, change the heading of the 'Summary Statistics' page to correspond with the project name, station number, and dates and times of the data presented in the graphs.
22. Be sure to save the Excel file after this step and through out the other steps.

Technically the data entry is complete; however, the data must be examined for quality assurance. During this process the first data line must be compared to the previous calibration sheet to verify that the data is similar to the data collected by the instruments during the clean readings. Secondly, the last data must be examined to verify that the data collected by the calibration instrument is close to one another. Lastly, the transition between the data in the previous month's file and the data in the current file needs to be verified. The technician will compare the last two weeks of data from the previous file (if one exists) to the data in the beginning of the current file to verify that the transition is smooth, the pattern is similar, and there are no missing data.

Once the Excel spreadsheet is complete with respect to the data, the "Site History" Excel file (provided by the LDNR/CRD) must be completed and updated with respect to all the pertinent worksheets:

1. Site – Data History: This worksheet shall be updated every time the site/project is visited. This worksheet will provide a history for site visits as well as the dates data was voided and the reason for voiding the data.
2. CR Deployment_Removal: This worksheet tracks the make, model, and serial number of each continuous recorder at each station. When the instrument is removed from the field this worksheet needs to reflect the change by completing the Date Removed, Time Removed, and Notes columns. Then another line shall be added that contains the information regarding the instrument that was deployed in the previous instruments place. This provides a method for property control for the department with respect to the instrumentation.
3. Recorder Elevations: Any updates or changes that may have occurred as a result of changing instruments or other problems must be documented. Examples may include, but are not limited to the following:
    a. Raising of an instrument because sediment may have settled around the sensors. Consequently, the 'Mark to Sensor Distance' would change which would ultimately change the 'Sensor Elevation.'
    b. If another survey was performed and a discrepancy was found between the previous survey and the more recent survey.
    c. If another station was established because the other station was destroyed for any reason and the instrument was either not found or the station can no longer support a continuous recorder.

Once the Excel files have been completed, a field trip report must be generated. The field trip report must include: 1) field personnel and their respective agency, company, or organization on the trip, 2) purpose of the trip, 3) general weather conditions, 4) sites that were sampled, 5) type of sampling that took place, 6) an explanation of any logistical problems encountered in the field, especially problems that may affect the data, 7) any

notable biological activity or physical activity that may have altered the site, and 8) details of when and where the calibration instrument was calibrated and the solution used.

When the Excel files and field trip report have been completed, the technician must compile a quality assurance (QA) / quality control (QC) packet. This packet shall include:

1. the appropriate QA/QC checklist (Appendix A, Form 8) cover sheet
2. field trip report
3. photocopied 'Continuous Recorder Calibration Sheet(s)' (depends on the number of stations in a packet)
4. graphs printed from the Excel file 'Graphs' worksheet
5. summary statistics and percent completeness calculations printed from the Excel file 'Data' worksheet

The QA/QC packet and associated Excel files are sent to another individual for further examination and verification. This individual is referred to as the QA/QC officer.

Quality Assurance / Quality Control (Phase II)

The QA/QC officer immediately dates the packet upon receipt. Then the QA/QC officer will read the report and provide grammatical corrections, suggest clarifications, and comment as it pertains to the information on the data sheet. The QA/QC officer then examines the data sheet(s) for completeness and accuracy regarding the sections where calculations were performed in the field. The QA/QC officer must examine the Excel file for any erroneous data that is questionable. If mistakes or questions arise, then documentation must occur on the QA/QC checklist. At times it may be beneficial to place removable notes on the photocopy data sheet.

The QA/QC officer also checks the other Excel files to verify that the information regarding the deployment and removal of instruments is complete as well as the data history file with respect to the missing or voided data associated with the station.

Once the packet and files have been reviewed, the QA/QC officer shall initial and date all portions of the QA/QC checklist that are in accordance with the questions provided on the QA/QC checklist. Those areas that possess errors or have presented questions shall be addressed by the person responsible for Phase I.

Once the data collector has corrected or answered the problems found by the QA/QC officer, the QA/QC packet is again delivered to the QA/QC officer. The QA/QC officer examines the questions and verifies that all the data and information is 100% correct. This process will continue until all the corrections have been made and all the questions have been answered to the satisfaction of the QA/QC officer. Upon acceptance of the packet, the QA/QC officer will initial and date the rest of the QA/QC checklist.

After the QA/QC packet has been finalized, the data collector or the QA/QC officer must obtain the original data sheets. If problems were found with the data sheet(s) during the

QA/QC process, then the original data sheets must be corrected. This process shall be carried out by using black ball point ink pen. No one shall erase any data or information on the original data sheet. The proper procedure will be to draw a single line through the error and place the correction as close to the error as possible. The person will also place their initial and the data next to the correction.

6.2.4. Summary Data and Graphics

Twice per year (January and July), the previous 6-months (July) or 12 months (June) of QA/QC'ed stored data shall be downloaded from Oracle. Summary graphics shall be produced to show the entire period of marsh mat movement in reference to the elevation datum, the depth and duration of flooding, and the salinity concentration below the marsh mat, if applicable. With the yearly data, summary statistics and percent completeness with respect to the analysis used in the monthly packets shall be performed. This summary shall be printed with the graphs and provided to the LDNR/CRD.

6.2.5. Deliverables

Upon completion of the monthly QA/QC process, the original data sheets, field trip report, the QA/QC packet, and all the associated electronic files shall be delivered to the LDNR/CRD. Electronic files containing the data shall be in the appropriate deliverable format (Appendix B, Format 3) once the data has completed the QA/QC process.

7. SOIL POREWATER

An important factor in determining vegetative productivity and species distribution in coastal marshes and swamps is the salinity of the soil porewater (Mitsch and Gosselink 1993). The salinity in marsh soil water depends on several factors including inundation, depth to water table, groundwater movement, and freshwater inflow/diversion. As saltwater intrusion is an important concern in Louisiana coastal marshes, field personnel will measure soil porewater salinity in each CRMS site at 10 cm (3.94 in.) and 30 cm (11.81 in.) depth on a monthly basis as well as at each vegetation station during emergent vegetation sampling. Soil porewater constituents are relatively uniform above 20-25 cm (Feijtel et al. 1988) and the sampling depths represent the approximate mean and maximum depth of the root zone (Mitsch and Gosselink 1993).

There will be two different protocols for measuring soil porewater salinity. The first method will utilize sampling wells at depths of 10 and 30 cm (see Sprecher 2000 or Bohn 2001 for examples). These wells will be installed along the boardwalk and soil porewater salinity can be easily measured in the field using a salinity meter. The materials and methods for the use of wells discussed herein have yet to be utilized in southern Louisiana wetlands. Therefore, other such devices may be available that are more suitable in these ecosystems so recommendations may also be available (pending LDNR/CRD approval). The materials needed to construct this type of well and the method for construction is found in chapter 3.7.

The second method will be used during emergent vegetation sampling in which soil porewater salinity shall be measured at depths of 10 cm and 30 cm from within each of the vegetation stations after vegetation coverage is measured (see Chapter 10). Soil porewater salinities can be measured in the field using of a sipper probe to aid in extracting interstitial water from each depth and measuring salinity with a handheld salinity meter of extracted water (McKee et al. 1988). A sipper probe and porewater extractor will be utilized to measure porewater salinity (Figure 18). Field personnel will be required not to step into the vegetation plot. Instead, they shall carefully reach into the plot and carefully but firmly push the sipper probe to the required depth.

Sipper Probe and Porewater Extractor Materials List:

1. Rigid Sipper Probes
    a. Rigid plastic or stainless steel tubing with a diameter of 3.0 mm (0.12 in.) with a maximum length of 95 cm (37.4 in.)
    b. Epoxy or sealant
    c. Drill and bit (1/32”)
2. 60 ml syringe
3. 50 ml plastic centrifuge tube (or similar tube) with an inside diameter of at least 2.54 cm (1.0 in.)
4. Hand-held discrete salinity meter (YSI 30 or equivalent)

5. Tygon Tubing: 30-90 cm (1.0 – 3.0 ft.) length of tygon tubing attached to the open end of the rigid sipper probe
6. Two-way valve (if necessary)
7. Cheesecloth (if necessary)

Construction of Sipper Probe and Porewater Extractor:

1. Cut the rigid plastic or stainless steel tubing to length (~50 cm).
2. Seal one end of the tubing with an epoxy or sealant to prevent the passage of any liquid material.
3. Drill six (6) 1/32" holes, on opposite sides, 2, 3, and 4 cm from the sealed end. Thus, three (3) of the holes will be on one side while the other three (3) will be on the opposite side. This will allow the liquid to flow through the tubing into the syringe and minimize the effects of clogging.
4. Mark 10 cm and 30 cm on the rigid plastic tube measured from the center of the middle holes. Mark using tape or score the tube so that the depth can be felt on insertion
5. Securely attach a piece of the tygon tubing to the other end of the probe.
6. Then attach a two-way valve to the syringe and to the other end of the tygon tubing. Figure 18 shows the completed pore water extractor and syringe schematic.

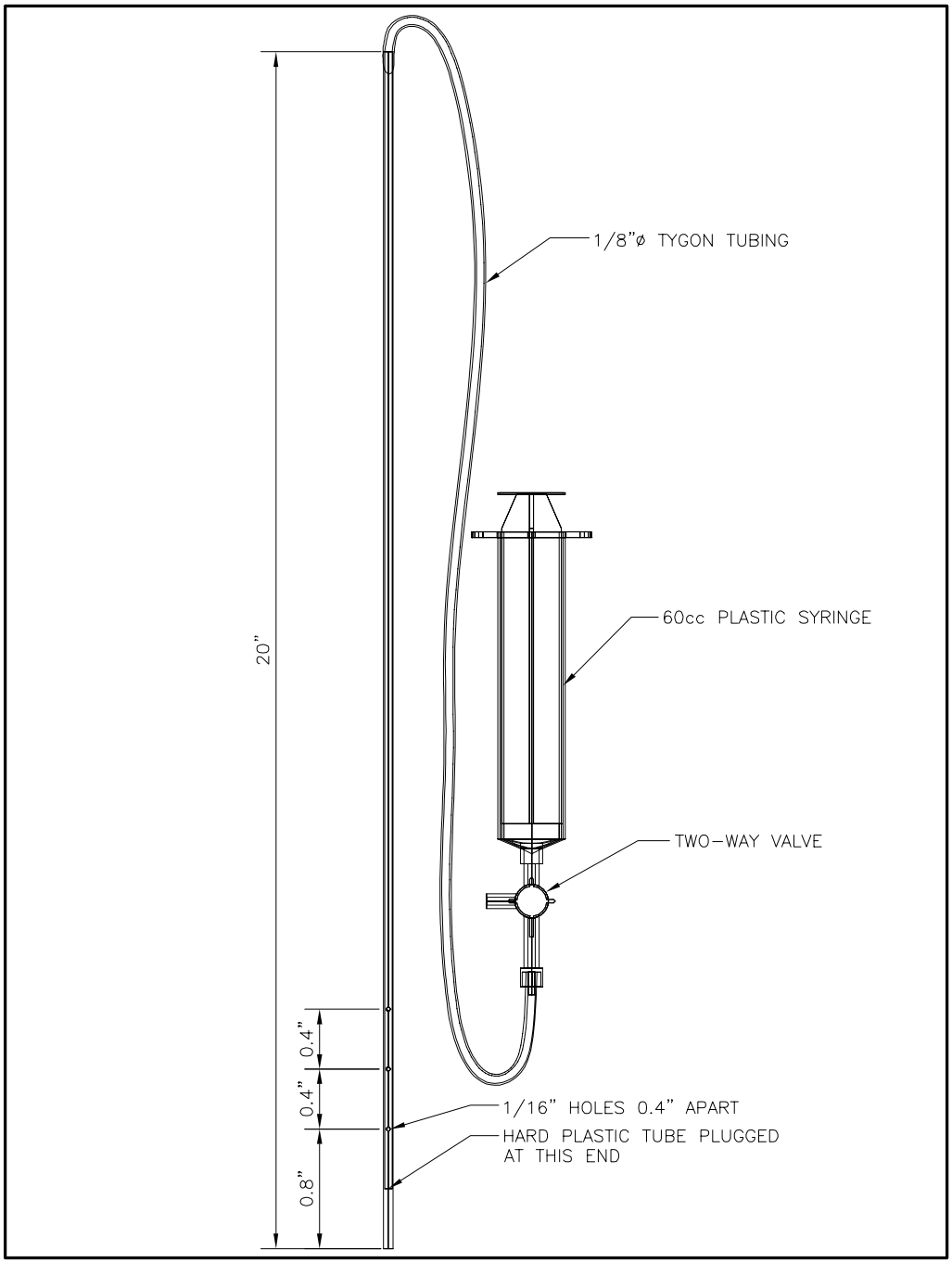

Figure 18: Typical soil pore water sipper that will be used to extract water from the vegetation plots.

7.1. Well Installation

Soil pore water wells shall be installed on the inside of the first segment of the base boardwalk in attached marshes (Figure 3) and on the right side of the first segment of the base boardwalk in flotant marshes (Figure 4). All wells will be attached to a wooden frame for support (Figure 12). The frame consists of two 2"x4" boards ("sharpened" at one end) driven approximately 3 – 4 ft into the ground and attached to a 2"x6" cross member via four 3/8" carriage bolts. Two carriage bolts for each 2"x4" should be sufficient to maintain stability, however a second 2"x4" cross member can be attached near the marsh surface if necessary. LDNR recommends installing the porewater frame into the ground first and using it as a brace while inserting the porewater wells to the prescribed depths. Each of the wells are attached to the 2"x6" cross member using U-bolts and staggered in such a way as to distinguish the differing porewater sampling depths (i.e., the shorter well is the 30-cm well). Cap each of the wells and fix with the wire lock pin. Lastly, the top 3 – 4 cm by ~3 cm of sediment around each of the wells shall be carefully removed and backfilled with bentonite sealant. Details methods are found in chapter 3.7.

7.2. Data Collection

Note: Before readings are taken in the field with a hand-held discrete salinity meter, the meter must be calibrated for quality assurance. Since the meter is capable of measuring a wide range of salinity concentrations, the instrument shall be calibrated with a solution that is relatively close to the conditions in the field. To maintain the highest degree of quality, the protocol for instrument calibration must be adhered to whenever the instrument is turned on or when the field conditions have dramatically changed. The meter shall also be calibrated monthly (see chapter 5.2).

Soil Porewater Wells

Soil porewater salinity is measured by removing the cap and inserting a salinity meter into the well. The salinity probe shall be gently lowered the bottom of the well and once the bottom is located, raise the salinity meter about 5 cm (2 in.) to prevent any muck or debris that may have settled at the bottom of the well from interfering with salinity measurements. Record the soil porewater temperature, specific conductance, and salinity on the soil porewater/discrete data sheet (Appendix A, Form 9). In some cases, water may not be available in the well and the salinity probe will report conductivity and salinity at or near 0.0. Make note of these instances on the data sheet.

Soil Porewater Salinity via the Sipper Probe

1. Prior to insertion for each replication, inspect the sipper holes for blockage and unclog as necessary.
2. From outside of each of the vegetation plots, insert the porewater sipper with the two marked graduations (10 and 30 cm) into the soil as near to the center of the plot to the 10 cm or 30 cm graduation.
3. Before measuring porewater salinity, the tubing, syringe, and centrifuge tube must be rinsed with porewater from each sampling depth at least once. Fill about one-third to

one-half the volume (~20-30 ml) of the syringe with porewater and rinse the interior of the syringe thoroughly. Discard the water. Extract another 30 ml of porewater and use it to rinse the centrifuge tube (it is recommended to use a two-way valve to dispense water from the syringe into the centrifuge tube to prevent losing suction on the sipper or the sipper hose).

   a. In some cases, there may not be enough water in the marsh soil for rinsing. Instead, de-ionized water may be used.

4. Dispose of the rinse and pull a third aliquot of porewater—enough to fill the centrifuge tube and cover the probe when it is in the centrifuge tube (~30-45 ml). In highly organic wetland soils porewater extraction may be blocked or severely inhibited by organic or small clay particles. If this condition occurs, securely fasten a piece of cheese cloth around the intake holes of the porewater sipper(s) to filter obstructing particles and extract another sample.
5. Dispense the sample into the centrifuge tube using the two-way valve, insert the salinity probe, and record the date (MM/DD/YYYY), time (CST), depth (cm), temperature (˚C), specific conductance (µS/cm), and salinity (ppt) on the soil porewater field data sheet (Appendix A, Form 9) for each pore water sample. Try to keep the probe from touching the side of the centrifuge tube.
6. Carefully remove the sipper probe and move ~5 cm (~2 in) to the right and re-insert the sipper probe into the soil matrix. Repeat steps 1-5 for each of all replicates and each depth. At each station, 3 replicates will be taken at the 10 and 30-cm depths for a total of 6 samples.

7.3. Data Processing

The LDNR/CRD has implemented a two phase protocol for data processing. These two phases are referred to as data entry (Phase I) and data quality assurance / quality control (Phase II). These two phases are conducted by separate individuals to assure that the final product is in agreement 100% with the data collected during the field sampling procedure.

Data Entry (Phase I)

Phase I is conducted by the individual responsible for the field data collection. Upon returning from the field, photocopies are produced of the original data sheet(s). The original data sheets shall be filed systematically until both phases are complete and the LDNR/CRD has accepted the final product. As part of the final deliverable product, the LDNR/CRD requires the original data sheet(s) as well as the photocopies.

Using the template Excel spreadsheet that has been developed and supplied by the LDNR/CRD, the data collector shall save the template using the following naming convention: Station_Porewater_*date*.xls (i.e., CRMS0391_Porewater_August2005.xls). This ensures that the template does not get changed accidentally and provides a working copy of the file.

Working from the photocopy, the data are transferred from the field data sheet to the Excel spreadsheet. The person responsible for the field data collection shall transfer 100% of the data into the corresponding cells of the spreadsheet. Once the data and information have been

transferred, they must check to verify that the data entry has been completed and all numbers and notes are 100% correct.

Once the Excel file has been completed, a field trip report must be generated. The field trip report must include: 1) field personnel and their respective agency, company, or organization on the trip, 2) purpose of the trip 3) general weather conditions, 4) sites that were sampled, 5) type of sampling that took place, 6) an explanation of any logistical problems encountered in the field, especially problems that may affect the data, 7) any notable biological activity or physical activity that may have altered the site, and 8) details of when and where the calibration instrument was calibrated and the solution used.

When the data have been completely entered and the field trip report has been generated, the appropriate quality assurance / quality control (QA/QC) checklist (Appendix A, Form 8) is attached to the copied data sheet(s) and the field trip report. This compilation is referred to as the QA/QC packet. The QA/QC packet is sent to another individual for further examination and verification. This individual is referred to as the QA/QC officer.

Quality Assurance / Quality Control (Phase II)

The QA/QC officer immediately dates the packet upon receipt. Then the QA/QC officer will read the report and provide grammatical corrections, suggest clarifications, and comment as well as verifying that all the necessary information is contained in the report. The QA/QC officer then compares the data sheet with the corresponding Excel data file. The QA/QC officer is examining the Excel file for any erroneous data that are questionable. If mistakes or questions arise, then documentation must occur on the QA/QC checklist. At times it may be beneficial to place removable notes (e.g., Post-it® notes) on the photocopied data sheet. Once the packet has been reviewed, the QA/QC officer shall initial and date all portions of the QA/QC checklist that is in accordance with the questions provided on the QA/QC checklist. Those areas that possess errors or have present questions for clarification shall be address by the person responsible for Phase I.

Once the data collector has corrected or answered the problems found by the QA/QC officer, the QA/QC packet is again delivered to the QA/QC officer. The QA/QC officer examines the questions and verifies that all the data and information are 100% correct. This process will continue until the Excel data file and the field trip has been accepted by the QA/QC officer. Upon acceptance of the packet, the QA/QC officer will initial and date the rest of the QA/QC checklist.

After the QA/QC packet has been finalized, the data collector or the QA/QC officer must obtain the original data sheets. If problems were found with the data sheet(s) during the QA/QC process, then the original data sheets must be corrected. This process shall be carried out by using a black ball point ink pen. No one shall erase any data or information on the original data sheet. The proper procedure will be to draw a single line through the error and place the correction as close to the error as possible. The person will also place their initial and the data next to the correction.

Strategic Online Natural Resources Information System (SONRIS) Data Entry

The SONRIS database is a storage and retrieval mechanism with respect to the discrete hydrographic data. The LDNR/CRD Restoration Technology Section (RTS) is responsible for the development and maintenance of the database as it pertains to field data and reports. Once the discrete hydrographic data has been accepted by the QA/QC officer as 100% correct, the person responsible for phase I shall transfer the data from the Excel data file to the SONRIS database.

The LDNR/CRD/RTS has developed a user's manual for uploading the discrete hydrographic data; however, the help function is the most up-to-date reference for assistance. The help function contains the most recent methods for importing, exporting, or troubleshooting problems associated with the database. The manual is updated periodically as the database changes with expansion and technology. The latest version on the manual was released in December 2003 with respect to the discrete hydrographic data. To properly import the data into the SONRIS database, the "User's Manual for Hydrographic and Emergent Vegetation Data Management" dated December 29, 2003 shall be followed. The most recent version of the document shall be used to input the data into the database.

The person responsible for the collection of data is also responsible for uploading the data into the SONRIS database. Once the person has followed the procedures outlined in the user's manual, the QA/QC officer is responsible for verifying the procedures have been followed properly and the data is properly stored in the database. Once the data has been accepted into the database, the QA/QC officer shall complete the QA/QC Checklist as it pertains to SONRIS. Upon completion of this section, the QA/QC packet is completed and the data shall be delivered to the LDNR/CRD.

Any statistical analysis, summary graphics, or data that are requested must use data downloaded from the SONRIS database.

7.4. Summary Data and Graphics

A soil porewater graph depicting mean monthly porewater salinity will also be required in January and July of each year, representing the previous 6 months of porewater data collection. The QA/QC'ed data shall be analyzed for mean variables at each depth and graphs shall be produced. These summary data and graphics (both hardcopy and electronic) shall be provided to the LDNR/CRD. A digital copy of the soil porewater graph template will be provided to the contractor by LDNR/CRD.

7.5. Deliverables

Once the monthly data set has been QA/QC'ed completely, the data sheets (original and photocopied), field trip report, electronic files with the format identical to Appendix B, Format 4, monthly calibration checklist, and monthly graphs shall be transferred to the LDNR/CRD.

On a yearly basis, the QA/QC'ed data will be downloaded and monthly means shall be performed and graphed to show the salinity means for each month of the year. The LDNR/CRD shall provide a template for the data analysis results and the graph.

8. ROD-SURFACE ELEVATION TABLE

The LDNR/CRD has implemented the use of the rod-surface elevation table (RSET) technique that has been developed by Cahoon et al. (2002a) and Cahoon et al. (2002b). The RSET is the preferred version of the SET that will be established at specified locations in attached, herbaceous marsh and swamp/bottomland hardwood forest ecosystems. The RSET method provides a non-destructive process that precisely measures changes in sediment elevation over time relative to a fixed subsurface datum. Briefly, a series of four foot stainless steel benchmark rods are driven through the root zone, the organic matter, and any soft underlying materials until refusal is encountered from a driving force on the rod. The rod remains approximately 2 feet above the marsh surface and is stabilized by a six inch diameter pipe that is cemented at the surface. A custom made stainless steel collar (Figure 19, part "I") is permanently attached to the rod to provide a constant horizontal reference plane as well as long-term repeatability as the table remains fixed for each sampling period. Detailed installation procedures are written in chapter 2.3.

Data collection occurs by attaching a custom made RSET table (Figure 19) to the collar and lowering nine (9) fiberglass pins through the table to the marsh surface (Figure 20). The height (measured in millimeters) that each pin extends above the table is used to calculate vertical changes of the marsh surface over time. The table is repositioned to measure the marsh surface at four 90 degree angles providing thirty-six (36) measurements per station. Using previously collected data, the rate of change can be calculated to provide a status and trends with respect to changes occurring between the surface and the bottom of the stainless steel rod.

The table is custom made and constructed of aluminum and stainless steel. These materials allow the table to withstand all environmental conditions found in Louisiana's coastal zone but also make it relatively expensive. The LDNR/CRD will supply surface elevation tables and components necessary to acquire repeatable, precise, and accurate measurements.

Marsh surface elevation change measured by the RSET is influenced by both subsurface processes occurring in the soil profile and surface accretion whereas the feldspar marker horizon (Chapter 9) measures only surface accretion. When these two techniques are used in conjunction, they can provide information on below ground processes that influence surface elevation change. Differences between the rates of vertical accretion and surface change can be attributed to processes occurring below the feldspar layer and above the bottom of the RSET benchmark pipe. Consequently, it is imperative that the first RSET measurements occur on the same day as the establishment of the accretion plots. The accretion plots are established using the feldspar marker horizon method described in chapter 9. The information that is concluded from these two methods do not account for any process that occurs beneath the rod.

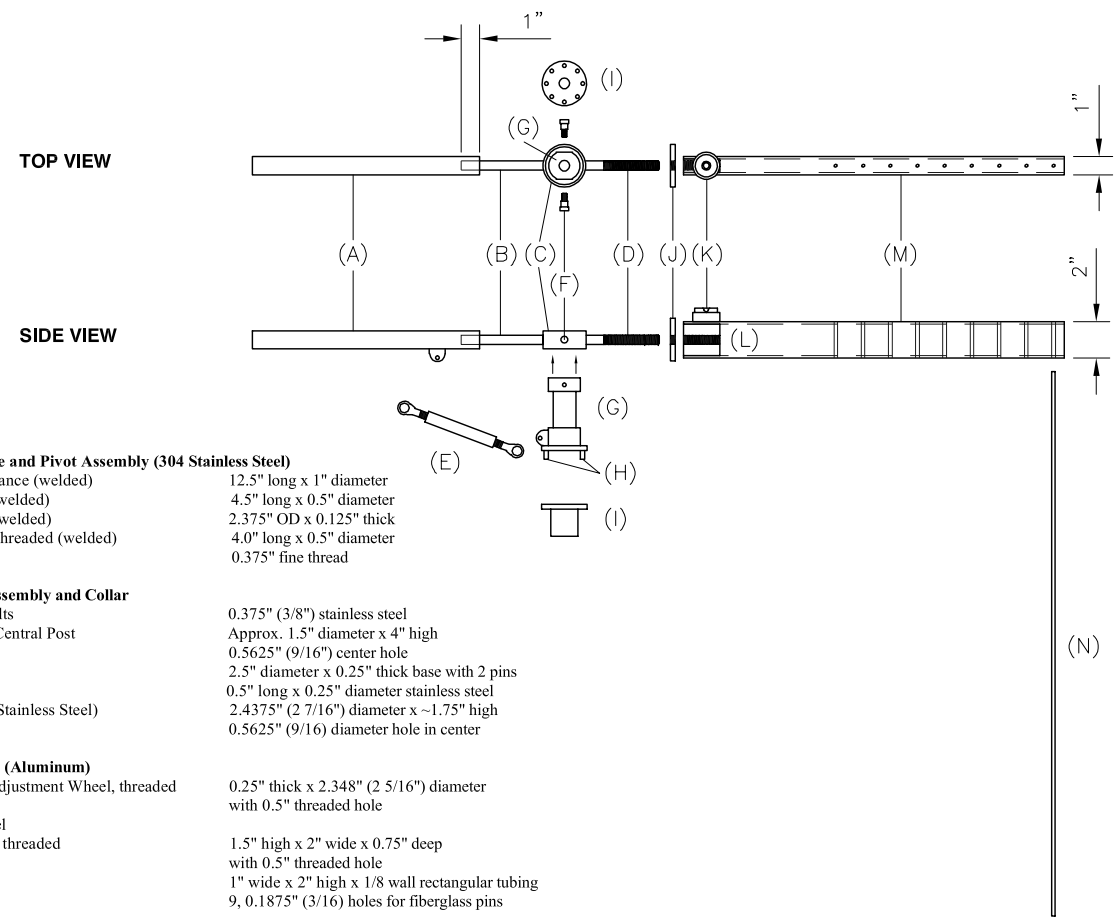

Counter Balance and Pivot Assembly (304 Stainless Steel)

(A) Counter Balance (welded)	12.5" long x 1" diameter
(B) Connector (welded)	4.5" long x 0.5" diameter
(C) Pivot Ring (welded)	2.375" OD x 0.125" thick
(D) Connector, threaded (welded)	4.0" long x 0.5" diameter
(E) Turnbuckle	0.375" fine thread

Vertical Post Assembly and Collar

(F) Shoulder Bolts	0.375" (3/8") stainless steel
(G) Aluminum Central Post	Approx. 1.5" diameter x 4" high 0.5625" (9/16") center hole 2.5" diameter x 0.25" thick base with 2 pins
(H) Collar Pins	0.5" long x 0.25" diameter stainless steel
(I) Collar (304 Stainless Steel)	2.4375" (2 7/16") diameter x ~1.75" high 0.5625" (9/16) diameter hole in center

Measuring Arm (Aluminum)

(J) Horizontal Adjustment Wheel, threaded	0.25" thick x 2.348" (2 5/16") diameter with 0.5" threaded hole
(K) Bubble Level	
(L) Solid Block, threaded	1.5" high x 2" wide x 0.75" deep with 0.5" threaded hole
(M) 21" Arm	1" wide x 2" high x 1/8 wall rectangular tubing 9, 0.1875" (3/16) holes for fiberglass pins

Pins

(N) Fiberglass pins	0.1875" diameter x 2.5' long

Figure 19: Construction drawing of a surface elevation table used on a 9/16" benchmark rod (Source: Cahoon et al. 2002b).

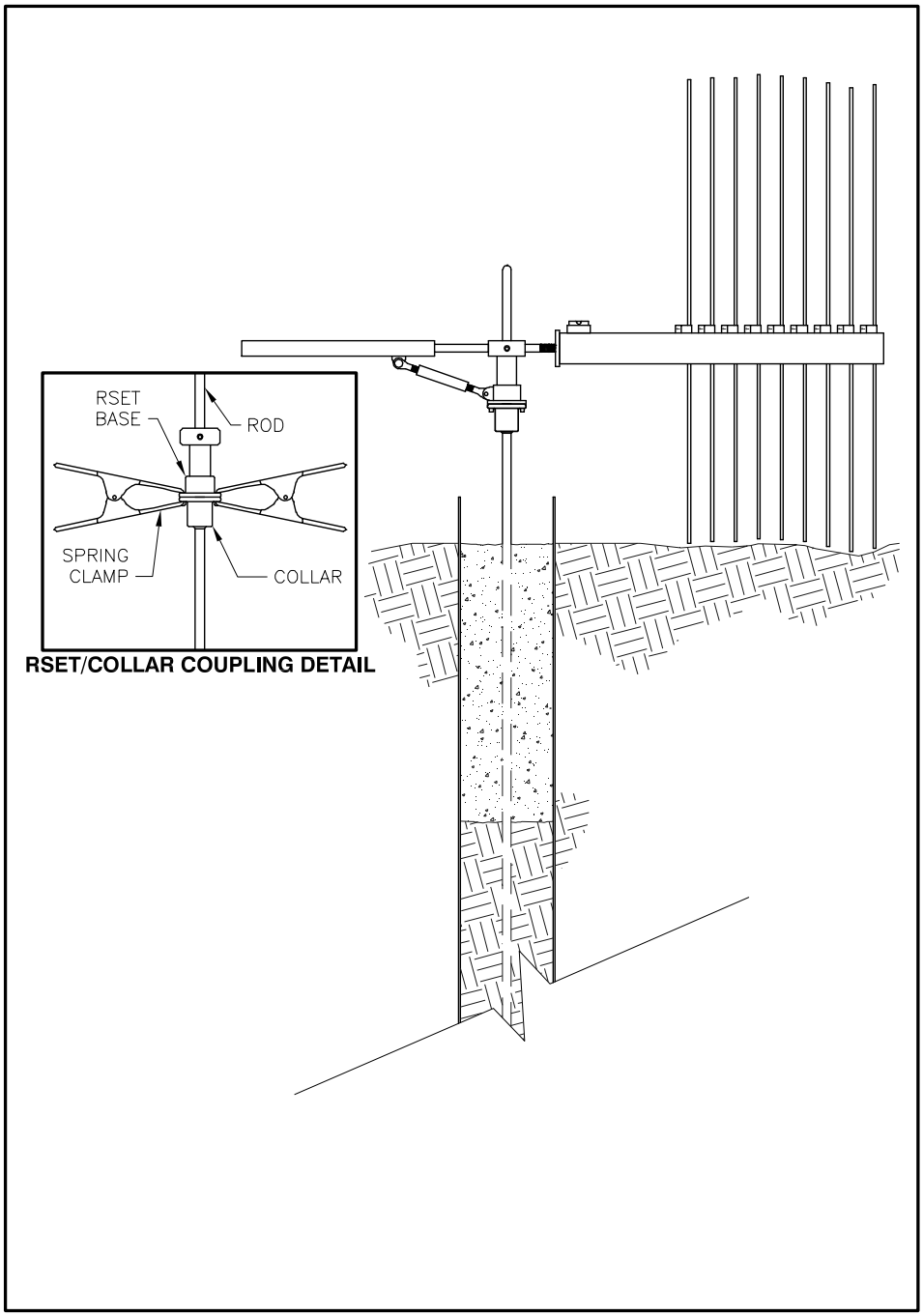

Figure 20: A typical RSET data collection schematic showing nine pins used to measure.

Materials List

The materials list for establishing a RSET station is found in chapter 2.3. The LDNR/CRD will provide the collar during the installation phase since it is permanently attached to the stainless steel rod. The LDNR/CRD will also provide the SET and the necessary components needed to collect the measurements. Figure 6 shows a schematic of the benchmark with the collar.

8.1. Field Station Establishment

The detailed method for establishing a RSET station is found in Chapter 2: Site Construction, section 2.3 of this manual.

8.2. Data Collection

The LDNR/CRD shall provide all the necessary data collection components needed for the collection of data associated with this technique. To assure that the highest degree of accuracy is achieved, it is imperative that all the components of an individual unit remain together. Since the LDNR/CRD will produce multiple units, each one possesses its own unique serial number. Therefore, when a piece breaks or problems arise with the equipment, the LDNR/CRD must be informed so replacements can be obtained. This equipment is manufactured through the specifications developed by this agency; therefore, any replacement pieces need to be coordinated with the LDNR/CRD.

Each RSET unit shall contain the following components (minimum):

1. The surface elevation table.
2. Minimum of nine (9) fiberglass rods (numbered to correspond with respectively numbered holes on table).
3. Minimum of nine (9) badge clips.
4. Minimum of two (2) spring clamps.
5. Aluminum metric measuring device capable of measuring in millimeters with the end being zero millimeters.

Due to some variability between crucial pieces, it is imperative that the RSET unit used to take the initial reading at a station be used for all subsequent measurements with that station. Therefore, the unit used for the initial reading shall be documented on the "RSET Data Sheet" (Appendix A, Form 14) to verify that the same unit was used at all subsequent data collections.

The following protocol has been adopted from the sampling method developed by Cahoon et al. (2002a, b). The sampling protocol is also thoroughly explained on Cahoon's USGS web site http://www.pwrc.usgs.gov/resshow/cahoon/. These references give an excellent overview of how the sampling occurs, but it must be noted that the following protocol is written for the collection of data according to the LDNR/CRD standards.

Field Materials List

1. RSET unit (contains the RSET and components listed above)
2. Data sheet(s) (Appendix A, Form 14)
3. Field notebook
4. Pencils
5. One or two 2”x12”x10’ boards
6. Compass
7. Cleaning supplies (brushes, towels, etc.)

Procedures

REMEMBER: Accretion stations shall be established on the same day as the first RSET reading and will be sampled when the RSET measurements are taken in the future. The data sheet shall have notes regarding the establishment or collection of data associated with the accretion stations.

REMEMBER: All work is performed from the boardwalk; consequently, no walking on the marsh surface is permitted.

1. Place one or two boards between the boardwalks.
2. Remove any material that has grown or accumulated on the stainless steel rod and collar. The table must sit flush on the collar.
3. Verify the collar has not moved vertically or around the collar.
    a. Using a metric ruler, measure the distance between the top of the stainless steel rod and the top of the collar in millimeters. Record the distance in the appropriate place on the data sheet.
    b. Determine whether or not the collar has rotated around the rod by using a compass, the numbers stamped on the collar, and information documented during the construction phase.
    c. If the collar has moved continue to step 4. If the collar has not moved proceed to step 5.
4. Document that the collar has moved and if the station has any other obvious damage that would prevent the station from being used. If the station cannot be used, report the damage to LDNR verbally as well as documenting the site with pictures and a site characterization through a field trip report. If the collar has slipped and the station has not been damaged follow the procedures set forth in step 4a.
    a. Determine if the collar is too high or too low on the rod for the table. If this is the case, position the collar on the rod such that the table can be used effectively. Position the collar such that the numbers align close to the original location. Tighten the screws and secure to the rod.
    b. Documentation must be sufficient to illustrate to others that the data that was collected previously cannot be compared to the data that will be collected at this time or any future dates. A new baseline will be determined.

5. Slide the SET (Figure 19) onto the rod by aligning the collar pins (Figure 19, part "H") with the holes in the collar such that the table points in the direction of one of the four corners of the boardwalk. NOTE: Sampling will occur at four (4) 90° angles.
6. Clamp the SET to the collar once it is in place by using two spring clamps.
7. Once the SET is secured to the collar, level the table by using the turnbuckle and level bubble. This table must be perfectly level in order to get precise measurements.
8. Using a compass, determine the direction (bearing) of the table. Record the bearing next to the corresponding direction on the "Surface Elevation Table Data Sheet."
9. Record the unique code and serial number for the SET equipment.
10. One at a time, take the nine (9) fiberglass pins (3/16") and pass them through the respectively numbered holes on the arm of the SET (The same rod shall pass through the same hole every time the table is used to collect data.). Gently lower the rods onto the surface of the marsh making sure not to penetrate the surface of the marsh. In dense vegetation, leaves and non-attached debris may have to be carefully pushed aside in order for the rod to rest on the marsh surface. In this case, notes shall be written explaining what took place.
11. Once the fiberglass rod is touching the marsh surface, use a badge clip to secure the rod from moving downward.
12. Continue this process until all nine rods are touching the marsh surface and are secured from moving. All nine (9) measurements will be taken by measuring the distance from the top of the aluminum arm (Figure 19, part "M") to the top of the rod in millimeters and recorded on the data sheet to the corresponding pin being measured. The measurer should make sure his/her eyes are level with the ruler to avoid parallax. Note: If two people are taking the measurements, then the person recording the measurements should repeat the measurement that was written. This assures that the correct number was understood and recorded.
13. As measurements are being taken, the measurer must observe what the fiberglass rod is resting upon and make notes.
14. Once the measurements have been recorded, raise the fiberglass rods and clamp them with the badge clips so that the pins do not interfere with rotating the SET arm.
15. Unclamp and lift the table so that the pins have cleared the collar.
16. Rotate the table 90° (towards another boardwalk corner), re-clamp the SET to the collar, and follow procedures 7 through 15.
17. Continue these steps until 4 sets of 90° measurements have been obtained.
18. Upon completion of the forth rotation of the SET, review the data sheet to verify that all the measurements have been obtained.

If measurements have been altered by some type of obstruction, then documentation regarding the quality of the measurement shall be provided on the data sheet. Also, if an unusual occurrence takes place that would alter a majority of the readings in a particular direction, the table shall be rotated 45 degrees to obtain the readings. Specific documentation shall occur for this particular disposition such that the subsequent readings are taken from this position.

8.3. Data Processing

The LDNR/CRD has implemented a two phase protocol for data processing. These two phases are referred to as data entry (Phase I) and data quality assurance / quality control (Phase II). These two phases are conducted by separate individuals to assure that the final product is in 100% agreement with the data collected during the field sampling procedure.

Data Entry (Phase I)

Phase I is conducted by the individual responsible for the field data collection. Upon returning from the field, photocopies are produced of the original data sheet(s). The original data sheets shall be filed systematically until both phases are complete and the LDNR/CRD has accepted the final product. As part of the final deliverable product, the LDNR/CRD requires the original data sheet(s) as well as the photocopies.

The LDNR/CRD's Restoration Technology Section has developed the Strategic Online Natural Resources Information System (SONRIS) database for RSET data entry and storage. The RSET data will be entered into the spreadsheet format provided in Appendix B, Format 5 and saved in a *.CSV format. This format will be used to directly batch-load RSET data into the SONRIS database once the QA/QC procedures have been completed. Once data has been entered, the newly-created *.CSV file will be checked for keystroke errors and completeness. This file should be named using the convention: Station _RSET_*date*.xls, i.e., CRMS0398_RSET_August2005.

Check the data entered into the RSET data upload format (Appendix B, Format 5) for completeness and correctness against the field data sheet. This raw data will be the file for upload into SONRIS but the data must first be further checked for quality using the SETqc.xls file provided by LDNR. This file is intended to be an example of one way to QA/QC the SET data for quality. The SETqc.xls file accomplishes the minimum QA/QC requirements of LDNR for RSET data. It aids in identifying observations that are either false or are questionable by computing the differences between pin height observations (mm) from the most recent and the previous RSET measurements. It further checks for consistencies that must be met for each CRMS station including the same RSET instrument is leveled in the same four directions each time. These data quality assessment measures are necessary due to the sensitivity of RSET readings to a number of factors that may affect marsh elevation change. The SETqc.xls workbook should aid in early identification of problems due to human error or soil disturbance. It is not intended to track long term trends in elevation change but merely compares the most recent data collection to the previous data collection in a convenient manner.

Ensure that the SETqc.xls template does not get changed accidentally, by saving the template (using "save as") with the following naming convention: Station_RSETqc_*date*.xls, i.e., CRMS0398_RSETqc_August2005.xls. This will provide a working copy of the file.

The RSET Excel spreadsheet (SETqc.xls) shall be used during the QA/QC process and contains three (3) worksheets within the file. The worksheets include "Raw Data," "QA_QC," and "Graphs." See the example spreadsheet provided by LDNR, "RSETqc_example.xls.

1. "Raw Data": This worksheet follows the exact format that SET data are stored and/or retrieved from the LDNR/CRD database. Data from the previous reading should be extracted from the database and pasted into the top of this worksheet (beginning at row 2) and data recently entered into the RSET format from the datasheets should be pasted below the data from the previous reading (beginning at row 38).
2. "QA_QC": This worksheet contains formulas and references the "Raw Data" worksheet. This worksheet facilitates checking for consistencies and identification of questionable RSET pin height readings by placing data from both the previous and most recent RSET reading side by side. Further, this worksheet calculates differences in pin heights (mm) between readings and identifies differences that are outside of the 95% Confidence Interval for further inspection.
3. "Graphs": This worksheet aids in the visual inspection of the data for quality assurance. The graph produced compares the means of elevation change (pin height differences (mm)) for the four RSET directions and plots variation within each direction.

For QA/QC, the data must be compared to the previous SET pin measurements to assess data quality. The RSETqc.xls worksheet was developed to facilitate the QA/QC of the data before it is entered into the database.

After the RSET data has been entered into the correct format and checked for correctness, the person responsible for the field data collection shall transfer the data into the corresponding cells of the RSETqc.xls worksheet. The raw data from the previous measurement should be exported from SONRIS and pasted into the first 36 rows of the "Raw Data" worksheet (beginning at row 2). The new data should be pasted below the data from the previous reading (beginning at row 38) (see SETqc_example.xls). Prior to pasting, both data sets should be sorted by collar direction and pin number with direction 1 pins 1-9 followed by direction 2 pins 1-9, etc... Data exported from SONRIS should already be in this order. Check that there are a total of 73 populated rows in the "Raw Data" worksheet.

In the "QA_QC" worksheet, check first for consistency between readings. This worksheet refers to data from the most recent measurement as 'Now' and from the previous measurement as 'Then'. Check that the same SET instrument was used as had previously been used by comparing data in the columns 'RSET ID Now' and 'RSET ID Then'. Further check that the four collar direction for the four collar directions is the same as the previous measurements by comparing the columns 'Direction (Collar #) Now' and 'Direction (Collar #) Then'. Check that the actual bearing for each collar direction has not changed by comparing the bearings (Direction (Deg)) now and then. If data were purposely collected in a different direction for some reason, i.e. one direction was compromised or disturbed in some way, the reasons for leveling the SET in alternate directions should be recorded in the RSET QA/QC Checklist (Appendix A, Form 15) and in the Site History.xls file.

To check the data for quality, elevation change must be calculated. Elevation change is simply the difference between the most recent pin height observation and the previous pin height observation (mm). The "QA_QC" worksheet calculates elevation change and identifies changes that are outside of the 95% Confidence Interval (CI) for the mean of a given direction.

Observations that should be further studied are flagged in the 'Observation Outside 95% CI' column (see SETqc_example.xls). Observations that are not within the CI for a direction do not necessarily represent bad data. Note that the contractor is not to delete any data. However, these observations should be more closely scrutinized as they may indicate that some disturbance has occurred to a plot, that a pin has been compromised in some way, or that the same surface is not being measured consistently. In most cases, observations falling outside of the 95% CI will represent natural variation and not be cause for concern. When observations fall outside of the 95% CI, compare the comments then and now. Attach the "QA_QC" worksheet and any explanations for outliers that can be found to the QA/QC Checklist.

A graph of mean elevation change and variation for each direction is generated in the "Graphs" worksheet. Check that the means in the four directions are similar and that the variation (error bars) is about the same. If this does not appear to be true from the graph, return to the "QA_QC" worksheet and re-investigate the aberrant direction. Analysis of Variance of elevation change by the four directions has been conducted on the "Graphs" worksheet. If there is a significant difference between directions (p-value <0.05), re-investigate all of the data. It is possible that one or two directions could be significantly different from the others due to natural wetland micro-topography and rates of elevation change therein but each direction should be changing at about the same rate. If one direction has a negative elevation change and the others are positive or vice versa, this data should be examined closely as it is likely that one direction has been compromised, most likely by a large animal or human. A new direction may need to be leveled on the next visit. The graph, notes on the graph, and statistics should be attached to the QA/QC Checklist. Any apparent site disturbance should be noted in the SiteHistory.xls file.

Once the Excel files have been completed, a field trip report must be generated. The field trip report must include: 1) field personnel and their respective agency, company, or organization on the trip, 2) purpose of the trip, 3) general weather conditions, 4) sites that were sampled, 5) type of sampling that took place, 6) an explanation of any logistical problems encountered in the field, especially problems that may affect the data, 7) any notable biological activity or physical activity that may have altered the site, and 8) details of when and where the calibration instrument was calibrated and the solution used.

When the data have been entered, checked for completeness, consistency, and quality and the field trip report has been generated, the appropriate QA/QC Checklist (Appendix A, Form 15) is completed and attached to the copied field data sheet and the field trip report. Two worksheets from RSETqc.xls are attached to the QA/QC Checklist ("QA_QC" and "Graphs"). This compilation is referred to as the QA/QC packet. The QA/QC packet is sent to another individual for further examination and verification. This individual is referred to as the QA/QC officer.

Quality Assurance/Quality Control (Phase II)

Phase II begins when the QA/QC officer receives the packet. The QA/QC officer immediately dates the packet upon receipt. Then the QA/QC officer will read the report and provide grammatical corrections, suggest clarifications, and comment on each part of the packet as well as verify that all the necessary information is contained in the report.

The QA/QC officer then compares the data sheet with the corresponding Excel files for any erroneous data and reviews the RSET QA/QC Checklist. If mistakes with data transfer have occurred or questions arise, then documentation must be presented on the QA/QC checklist. Once the packet has been reviewed, the QA/QC officer initials and dates all portions of the QA/QC checklist that are in accordance with the questions provided on the QA/QC checklist. Those areas that possess errors or have presented questions for clarification shall be addressed by the person responsible for Phase I.

Once the data collector has corrected or answered the problems found by the QA/QC officer, the QA/QC packet is returned to the QA/QC officer. The QA/QC officer examines the questions and verifies that all the data and information are 100% correct. This process will continue until the QA/QC packet has been accepted by the QA/QC officer. Upon acceptance of the packet, the QA/QC officer will initial and date the rest of the QA/QC checklist.

After the QA/QC packet has been finalized, the data collector or the QA/QC officer must obtain the original data sheets. If problems were found with the data sheet(s) during the QA/QC process, then the original data sheets must be corrected. This process shall be carried out by using a black ball point ink pen. The person shall not erase any data or information on the original data sheet. The proper procedure will be to draw a single line through the error and place the correction as close to the error as possible. The person will also place their initials and date next to the correction.

8.4. Summary Data and Graphics

Upon completion of the QA/QC process, the data graphs and summary statistics shall be printed. For RSET, these are not the same as the direction comparisons conducted in QA/QC, but include analysis of the rate of elevation change since station establishment which is accomplished by plotting mean elevation change over time and plotting a regression through that data. The resulting slope is the rate of elevation change for a site.

Summary statistics and graphs shall be produced twelve months after the initial reading. This data shall be downloaded from the SONRIS database to ensure the data being analyzed has completed the QA/QC process. The data shall be analyzed according to methods provided by the LDNR/CRD. Once the data have been analyzed, summary graphs will be generated using the format provided by the LDNR/CRD. The summary data and graphics shall be transferred to the LDNR/CRD in a hardcopy and electronic format.

8.5. Deliverables

Upon completion of the QA/QC process, the original data sheets, the QA/QC packet, and all the associated electronic files shall be delivered to the LDNR/CRD. Electronic files containing the data shall be in the appropriate deliverable format (Appendix B, Format 5 and SETqc.xls) once the data has completed the QA/QC process.

Within one month after the third data collection effort for the twelve month period, the summary statistics and graphs shall be delivered to LDNR/CRD in both the hardcopy and electronic format.

9. ACCRETION

Accretion / erosion will be measured by the establishment of three half-meter by half-meter marker horizon stations systematically placed around a boardwalk. The marker horizon is white feldspar clay that is evenly sprinkled on the surface of the wetland. At six and twelve months after establishment, the stations will be sampled using a cryogenic method developed by Cahoon et al. (1996). After the data have been collected, a two phase approach has been implemented by the LDNR/CRD for the insurance that the field data will be 100% correct when using for analysis and report writing.

Three systematically placed half-meter by half-meter stations will be established at each site during a two month period (February and March). A materials list and procedures for station establishment are as follows:

Materials List (minimum):

1. Feldspar
   G-200 white feldspar clay from the Feldspar Corporation, Minspar 200 or equivalent (Minimum 80 ounces or 5 mm thickness per station; 5-6 stations per 50 lb bag).
2. 50 cm x 50 cm PVC square
3. Markers
   PVC pipes 5 feet long or other material that will mark the location of the station. Minimum of 2 per station.
4. Spreader / Sieve
   A small cup-like device that will evenly spread the feldspar within the station.
5. Respirator
   A high quality respirator that will prevent the inhalation of the feldspar clay.
6. Watering Can or Garden Sprayer
   Used to moisten the feldspar on a dry marsh; must be able to moisten feldspar without disrupting an even feldspar layer.
7. Trashcan
   Used when the marsh is flooded to prevent the feldspar from settling outside the station area.
8. Miscellaneous
   Gloves and eye protection.
9. Digital Camera
   Capable of a date stamp to document the establishment of the stations.
10. Differential Global Positioning System
    To take coordinates of corner station for verification and identification.

9.1. Field Station Establishment

Accretion stations are to be established on the same day that the initial RSET readings are recorded. This gives the best-known baseline for both the accretion and RSET data sets to be interpreted when analysis occurs. Stations shall be established from the second week in February through the last week of March as vegetative growth is minimal during this time.

Three half-meter by half-meter stations will be established at each site during a two month period. Stations will be established systematically around the base boardwalk (Figures 21 and 22). Sites with an RSET will have 1 station placed left, right, and forward of the base boardwalk at all times. Floating marsh sites, with no RSET, will have 2 stations placed left and 1 station placed right of the boardwalk, with 1 station placed in each 10 foot section. At all sites, station establishment will start at the lowest plot number within each boardwalk section on the diagram.

Once the three stations have been established, data collection within the active stations will continue until newer stations are established. After the original stations have been established, the following scenario will dictate when plots will be sampled and when new stations will be established:

> When at least two feldspar plots are viable (if one plot becomes unproductive, continue with the remaining two plots, but re-sample the third plot each visit until all possible coordinates have been exhausted). In the event that two plots are lost, re-establish all three new feldspar stations and stop sampling the previously established stations after re-establishment. This way all active stations at each site will be of the same age and will be measuring the same processes so they can be used as reps.

Stations will be re-established at the lowest number available within the same boardwalk segment than the inactive station was in, thereby maintaining 1 active station per boardwalk segment (Figure 21 and 22).

All station establishment procedures must be performed from the boardwalk.

These procedures are as follows:

1. When applying the feldspar, all necessary health precautions should be taken since the material is a fine powder and can be easily inhaled. NOTE: An appropriate respirator and eye protection are required.
2. Document water level with respect to marsh surface in the "Notes" section of the data sheet (Appendix A, Form 16).
3. Place the 50 cm x 50 cm square on the marsh surface as close to the predetermined location (provided by LDNR/CRD) as possible.
4. Mark the stations using no less than two pieces of PVC. The PVC poles should be placed just inside the corner of the station closest to the boardwalk and closest to the beginning of the boardwalk. The other corner PVC shall be placed at the opposite corner. The PVC poles should be pushed into the marsh surface plumb until resistance is met or 2.5 feet of PVC is above the surface. NOTE: This method will assure that sampling will occur inside of the station at a later date.
5. Using a small cup, evenly sprinkle the feldspar on the marsh surface making sure not to leave any on the vegetation (vegetation can be gently shaken to remove any feldspar from the plant to the marsh surface). Each station is evenly coated until a minimum thickness of 5 mm is achieved or no less than 80 ounces (2.27 kg) of feldspar is used.

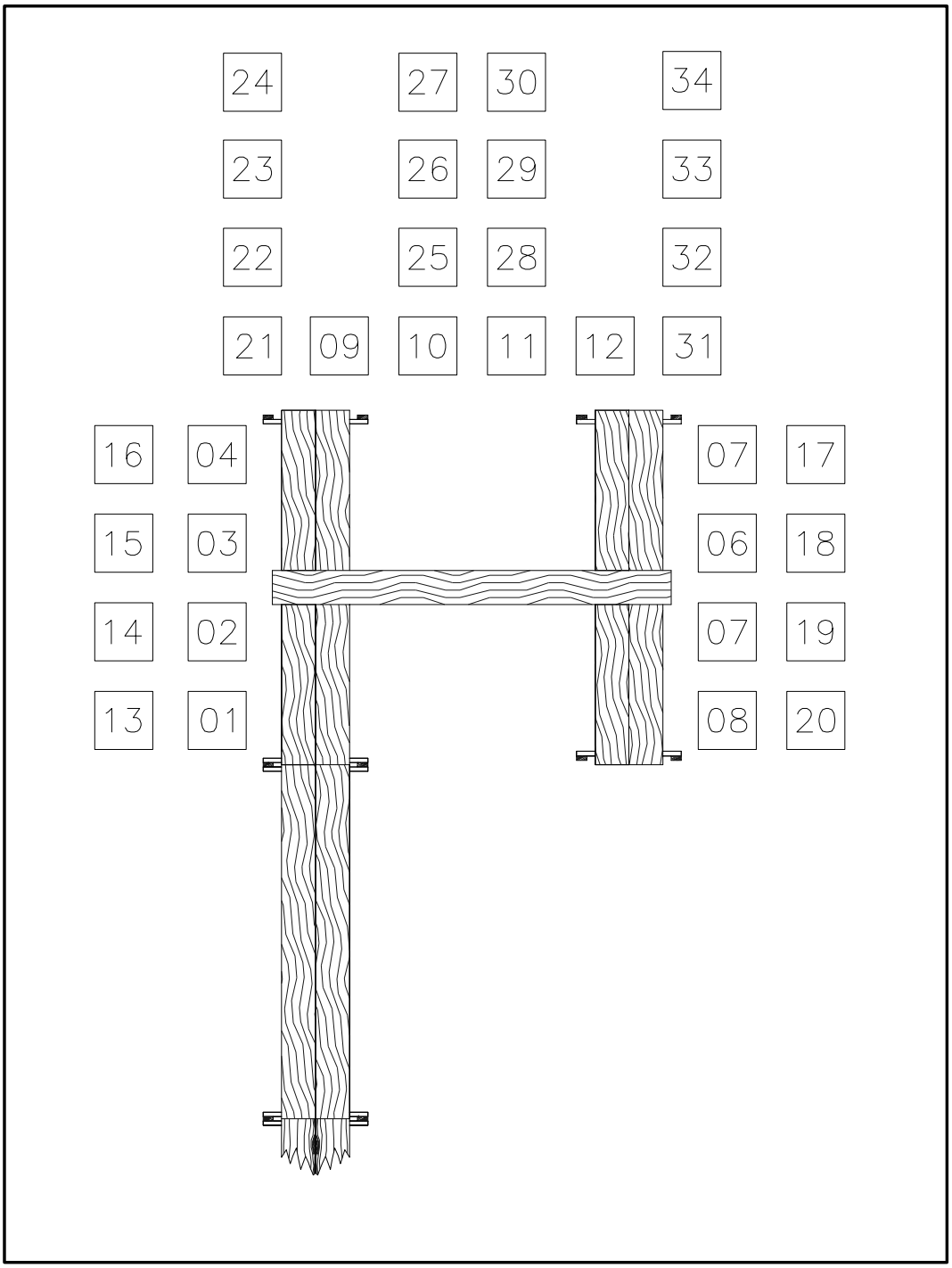

Figure 21: Schematic of the rotation of accretion plots around an attached marsh site.

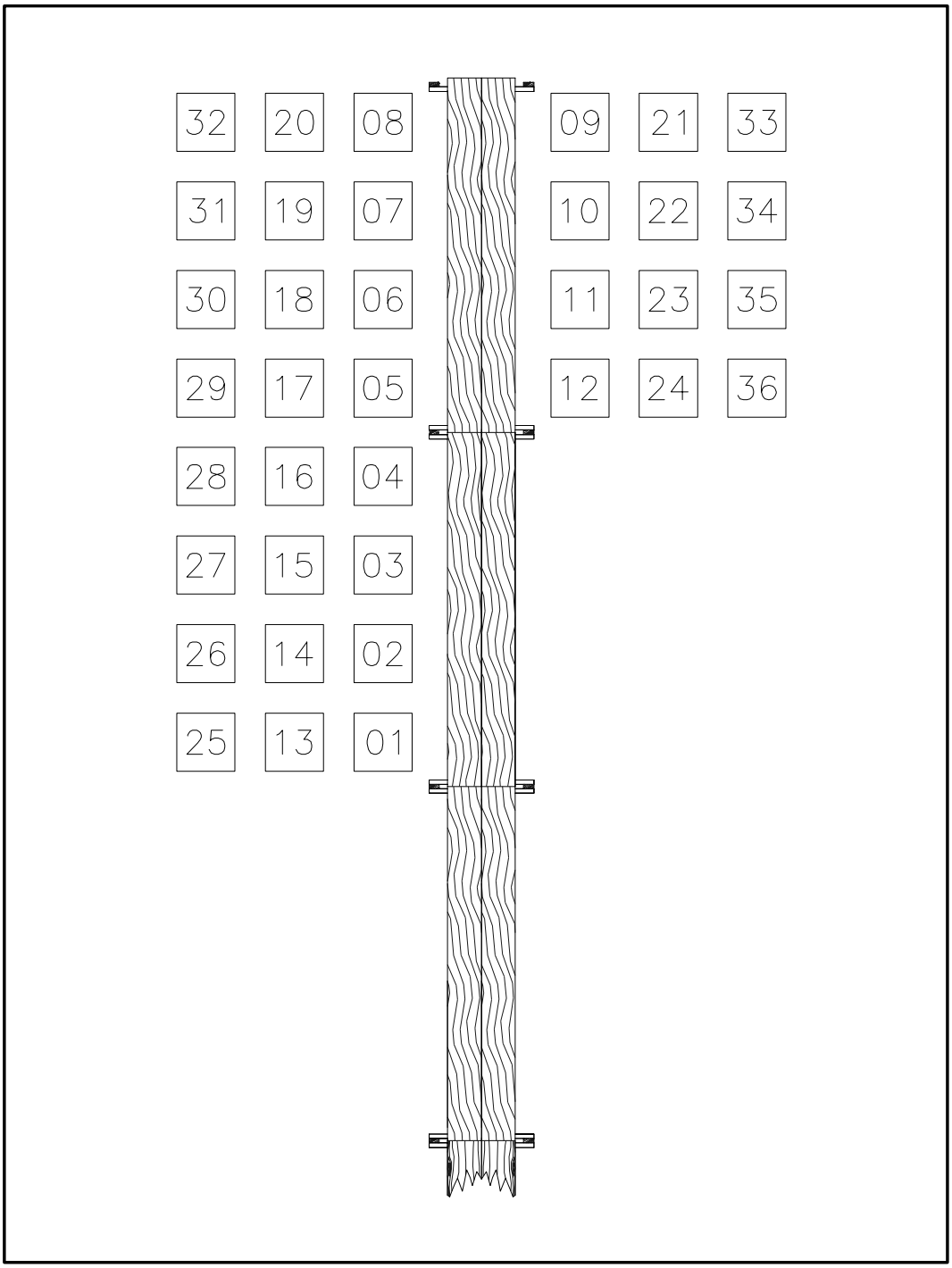

Figure 22: Schematic of the rotation of accretion plots around a floating marsh site.

a. If the marsh is dry on the day of the station establishment, the feldspar needs to be consolidated with water after it is applied. This consolidation is accomplished by carefully sprinkling the water through a watering can in a manner that moistens the feldspar to consolidate the material. Special attention needs to be taken such that the water does not produce any voids (exposed marsh surface) in the feldspar.
b. If the marsh is flooded on the day of the station establishment, some type of barrier needs to be used to allow the feldspar to settle to the marsh surface without drifting out of the boundary of the station. NOTE: The LDNR/CRD recommends a trashcan with the bottom cut out be used or a similar device. The can or device is place on the marsh and slightly penetrates the surface so there is no space between the marsh and can. It may take 15 minutes or longer for all the feldspar to settle. The feldspar has a tendency to float when it is applied until it becomes completely saturated. Remove the barrier when all the feldspar has settled.

6. Using a digital camera with the date stamp function enabled, pictures at each site will be taken to show the establishment and orientation of the three stations. NOTE: Pictures will include one taken directly above each station with the PVC pipes in place and another picture of the entire site will be taken. Pictures will be downloaded in a JPEG format and labeled with the appropriate station number and date taken prior to delivery to the LDNR/CRD. File names will be labeled using the following convention: *Station*_Accretion_*date.jpg* (CRMS0395_Accretion_March2005.jpg).
7. Differential Global Positioning System (DGPS) coordinates shall be obtained from one corner of each of the three stations at the site. These coordinates must be obtained by holding the antenna on the PVC pole closest to the boardwalk for no less than 10 seconds. The coordinates will be provided to the LDNR/CRD with the station number and the northing and easting coordinates of each station in UTM, NAD83 Meters using the "Station Coordinates" Excel file.

9.2. Data Collection

Sampling shall occur six and twelve months after the station has been established unless otherwise agreed upon by the LDNR/CRD. Consequently, the first sampling will occur in August and September and the second sampling will occur in February and March. Because of its white color, feldspar is distinguishable from the surrounding constituents and by knowing the date of establishment and the date of sampling, a rate of accretion/erosion can be determined for the site by measuring the amount of deposition above the horizon marker.

The rate of accretion/erosion is determined by a cryogenic technique (Cahoon et al. 1996) that utilizes a 15 – 20 liter self-pressurized liquid nitrogen Dewar tank (Figure 23) attached to a copper tube fitted with a tapered end (usually a .30 caliber / .308 diameter bullet) for easy insertion into the marsh. The tube is inserted into the marsh to a depth deeper than the feldspar and enough liquid nitrogen is injected into the tube to freeze a small sediment core. Once frozen, a sediment sample can easily be extracted from the marsh and 4 measurements positioned 90° from each other are made from the feldspar layer to the surface.

Data are collected and recorded on data sheets developed and provided by the LDNR/CRD. Notes pertaining to each individual sample must be recorded with respect to the condition of the

sample, the coordinates in the station that were sampled, and other problems or concerns that may arise during sampling.

All data collection activities must be performed from the boardwalk.

The following materials list contains the minimum equipment necessary to collect quality data and the procedures that shall be followed for the cryogenic technique for sampling (see also http://www.pwrc.usgs.gov/resshow/cahoon/).

Materials List (minimum)

1. Self Pressurized Liquid Nitrogen Tank and Assembly (Figure 23)
2. Stainless Steel Flexible Hose and fittings
3. Copper Bullets (12' and 18")
4. 50 cm x 50 cm PVC square (used during the station establishment)
5. Calipers: High quality stainless steel that measures up to 150 millimeters (mm) in increments of 0.02 mm.
6. Random Number Table
   Table of random numbers used for the sampling location within the station area. The table is arranged in an x,y format and the numbers are between 1 and 5.
7. Data Sheets (Appendix A, Form 16)
8. Field Notebook
9. Personal Protection Equipment
   Gloves and eye protection
10. Miscellaneous
    Small scraping device, wrenches, pencils, knife, bucket

Procedures

In the office, generate a random number table with X,Y coordinates. This table will contain coordinates of 1,1 to 5,5. To produce this table the numbers 1 through 5 will be randomly generated for each X and Y coordinate. Enough coordinates shall be generated to use at each station plus a few extra coordinates. NOTE: The extras will be used when there are problems with the first core. Secondly, if this is not the initial sampling period, make sure that these coordinates were not used previously. Therefore, field personnel must have the coordinates for the previous sampling periods.

The 50 cm x 50 cm square used to locate the position of the sample coordinates within the plot shall be divided into 4 evenly spaced sections on all sides. When determining the position of the random coordinate, the side closest to the end of the boardwalk and the left side of the square while the person's back is to the water vessel is consider the position 1,1. Follow the procedure below to properly sample the accretion plots.

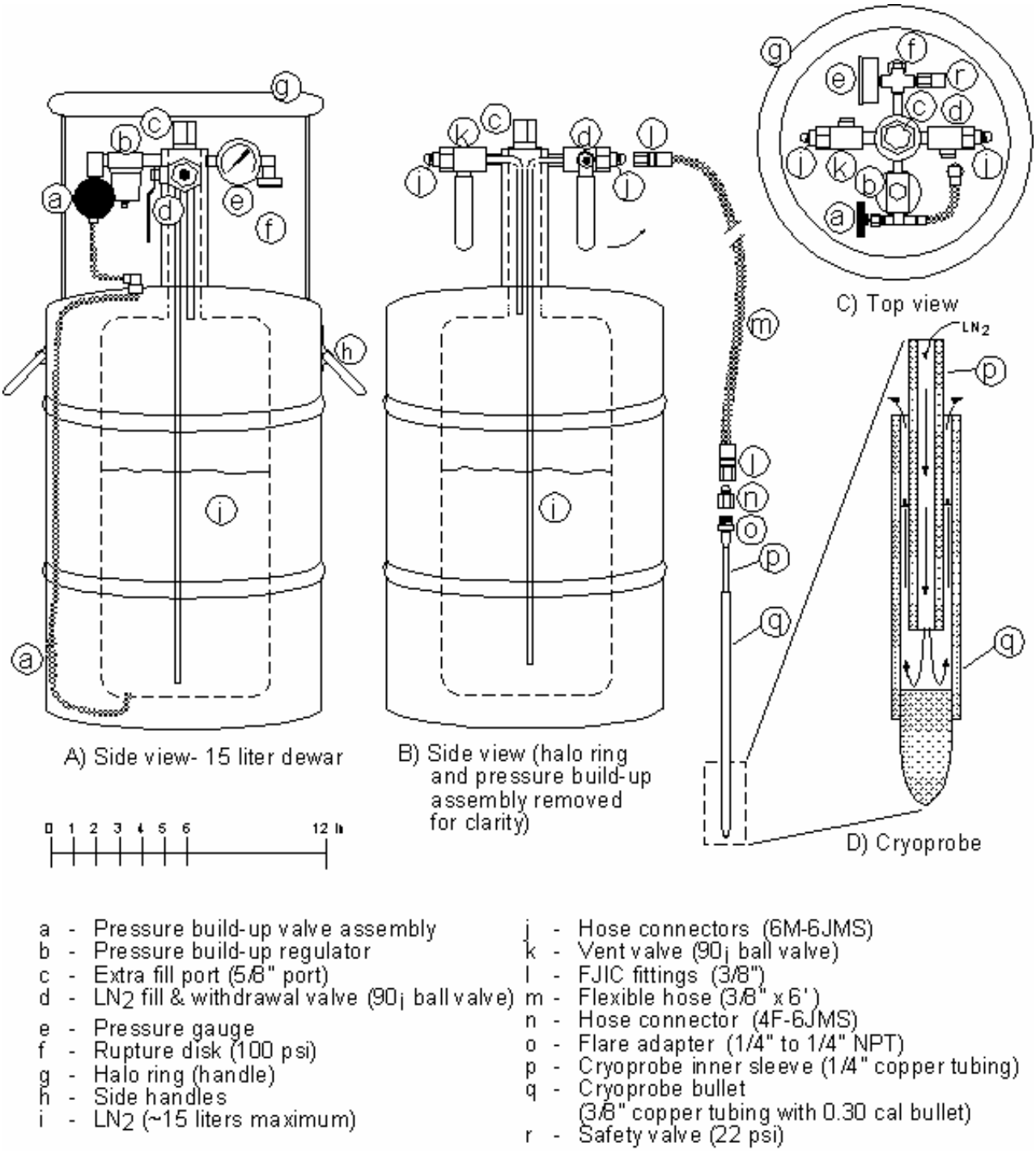

Figure 23: Schematic for the cryogenic coring device developed by Cahoon et al. 1996. A) A side view of a 15-L low pressure nitrogen tank (dewar); B) The side view rotated 90° with a halo ring removed for clarity; C) A top view; D) An enlarged view of the cryoprobe used to collect the sample.

1. After arriving at the site, connect the appropriate hose and fittings to the dewar tank.
2. Use the necessary personal protective equipment to prevent any injuries from occurring. A minimum of gloves and eye glasses are required.
3. Place the 50cm x 50cm square over the PVC poles that mark the station location. NOTE: The square shall have 4 evenly spaced markings on all sides. These markings will be used to determine where the sampling will occur in the station.
4. From the randomly generated table, select the position in the grid that will be sampled. Samples will be taken from the center of the coordinate. NOTE: Make sure these coordinates have not been used previously. Always have the coordinates used from the previous data collection trip(s) on hand.
5. Put the bullet that will be used for sampling over the inner core. This practice prevents any disturbance once the bullet penetrates the marsh surface.
6. Push the bullet with the inner core into the marsh in the location that corresponds to the randomly generated location. The bullet should be deep enough to freeze the feldspar and sediment to the bullet and have enough above the marsh surface to facilitate removal for measuring. This depth varies depending on previous feldspar depth and current field conditions.
7. Do not rock or move the bullet once it penetrates the surface. The marsh must remain in contact with the bullet for this process to be effective.
8. Open the valve on the dewar and start the flow of the liquid nitrogen into the bullet.
9. Allow the marsh to freeze around the bullet. Normally the core is frozen when you start to see a white cloud of gas coming out of the top of the bullet. (It may be best to let the liquid nitrogen run a bit longer until the person has experience with this procedure.)
10. Turn off the dewar when the core is frozen.
11. Remove the inner sleeve from the bullet. Be very careful with the hose as it becomes very brittle once it is frozen.
12. Grab the top of the bullet with your gloves and pull the core out of the marsh. Roots may need to be cut with a knife. NOTE: Make sure not to disturb too much marsh around the sample as it may affect the next sample.
13. When the frozen marsh core is removed, it is affectionately termed a “Cryo-core” or “Marshsicle”. Measurements and notes will be taken on the marshsicle.
14. Inspect the marshsicle for its quality regarding the ability to measure from the feldspar layer to the surface at four (4) 90 degree angles.
15. On the accretion data sheet (Appendix A, Form 16), complete the upper portion before recording the station information.
16. On the accretion data sheet, record the station number and the associated coordinates for the area being sampled. Record the condition of the feldspar found on the marshsicle as well as the condition of the marshsicle itself. For example, is the feldspar highly visible around the entire sample (record on the data sheet as excellent), is the feldspar only visible a quarter of the way around the sample (record as good to poor depending on how much feldspar is visible), or is no feldspar visible?

17. If the "marshsicle" is in good condition and a minimum of three readings can be acquired then continue onto 18. If the "marshsicle" is in bad condition or the feldspar cannot be found then another sample shall be taken. Be sure to document the core's condition on the data sheet. The process then repeats itself with the next set of random coordinates, a new marshsicle is extracted, and the marshsicle is examined. If this is the second or later sampling period, one must ensure that this coordinate has not been used during a previous sampling period.
18. When possible, take four measurements at right angles to each other. Measure the distance from the feldspar layer to the surface of the marsh using the calipers. If four measurements cannot be taken, then no less than three (3) readings shall be recorded.
19. Document the distance (in mm) from the marsh surface to the feldspar on the accretion data sheet with respect to the station number and the randomly chosen coordinates. NOTE: Do not use a zero if the feldspar layer is not visible. Zeroes mean either the feldspar is visible on the surface or once a marshsicle is removed the feldspar is visible but there is no measurable sediment on top.
20. Place the marshsicle back in the hole to thaw. If this process is done properly, a hole or other disturbance will not be left in the marsh where the sample was taken.
21. The station has been sampled when one of the following conditions is met: a marshsicle is extracted and three or four measurements can be collected or when two attempts are made and no feldspar is seen on the marshsicle.
22. Before leaving each site, field data sheets are to be examined for clarification and completion. Any information that was not completed on the boardwalk should be completed prior to leaving the area.

NOTES:

In a perfect world, the feldspar will be visible at all times in a perfect circle around the core; however, this does not always occur. At times the feldspar may still be visible on the surface. If this occurs, select the coordinates and verify that the feldspar is still on the surface and note this for the station.

In a highly organic environment, once the marshicle is removed there may be sediment and decomposing plant matter on top of the feldspar and then a void layer or water layer above the sediment and plant biomass. Only measure what is consolidated on top of the feldspar. Do not include the void area.

The length of the bullet depends on the amount of sediment that has accumulated on top of the feldspar and the depth of water on the marsh surface. Normally, two lengths of bullets are made and brought into the field (12 " and 18").

Measuring marshsicles can be subjective at times. It is highly recommended that the same person measure at all times when possible.

9.3. Data Processing

The LDNR/CRD has implemented a two phase protocol for data processing. These two phases are referred to as data entry (Phase I) and data quality assurance / quality control (Phase II). These two phases are conducted by separate individuals to assure that the final product is in agreement 100% with the data collected during the field sampling procedure.

Data Entry (Phase I)

Phase I is conducted by the individual responsible for the field data collection. Upon returning from the field, photocopies are produced of the original data sheet(s). The original data sheets shall be filed systematically until both phases are complete and the LDNR/CRD has accepted the final product. As part of the final deliverable product, the LDNR/CRD requires the original data sheet(s) as well as the photocopies.

Using the template Excel spreadsheet that has been developed and supplied by the LDNR/CRD, the data collector shall save the template using the following naming convention: Station_Accretion_*date*.xls, i.e.CRMS0391_ Accretion_August2005.xls. This ensures that the template does not get changed accidentally and provides a working copy of the file.

Working from the photocopy, the data are transferred from the field data sheet(s) to the Excel spreadsheet. The person responsible for the field data collection shall transfer 100% of the data into the corresponding cells of the spreadsheet. Once the data and information has been transferred, they must check to verify that the data entry has been completed and all numbers and notes are 100% correct.

Once the Excel files have been completed, a field trip report must be generated. The field trip report must include: 1) field personnel and their respective agency, company, or organization on the trip, 2) purpose of the trip, 3) general weather conditions, 4) sites that were sampled, 5) type of sampling that took place, 6) an explanation of any logistical problems encountered in the field, especially problems that may affect the data, 7) any notable biological activity or physical activity that may have altered the site, and 8) details of when and where the calibration instrument was calibrated and the solution used.

When the data have been completely entered and the field trip report has been generated, the appropriate QA/QC checklist (Appendix A, Form 11) is attached to the copied data sheet and the field trip report. This compilation is referred to as the QA/QC packet. The QA/QC packet is sent to another individual for further examination and verification. This individual is referred to as the QA/QC officer.

Quality Assurance / Quality Control (Phase II)

Phase II begins when the QA/QC officer receives the packet. The QA/QC officer immediately dates the packet upon receipt. Then the QA/QC officer will read the report and provide grammatical corrections, suggest clarifications, and make comments as well as verifying that all the necessary information is contained in the report. The QA/QC officer then compares the data

sheet with the corresponding Excel file. The QA/QC officer examines the Excel file for any erroneous data that is questionable. If mistakes with data transfer have occurred or questions arise, then documentation must occur on the QA/QC checklist. At times it may be beneficial to place removable notes (e.g., post-it notes) on the photocopied data sheet. Once the packet has been reviewed, the QA/QC officer shall initial and date all portions of the QA/QC checklist that are in accordance with the questions provided on the QA/QC checklist. Those areas that possess errors or have present questions for clarification shall be address by the person responsible for Phase I.

Once the data collector has corrected or answered the problems found by the QA/QC officer, the QA/QC packet is again delivered to the QA/QC officer. The QA/QC officer examines the questions and verifies that all the data and information are 100% correct. This process will continue until the Excel file and the field trip report have been accepted by the QA/QC officer. Upon acceptance of the packet, the QA/QC officer will initial and date the rest of the QA/QC checklist.

After the QA/QC packet has been finalized, the data collector or the QA/QC officer must obtain the original data sheets. If problems were found with the data sheet(s) during the QA/QC process, then the original data sheets must be corrected. This process shall be carried out by using a black ball point ink pen. No one shall erase any data or information on the original data sheet. The proper procedure will be to draw a single line through the error and place the correction as close to the error as possible. The person will also place their initials and the data next to the correction.

9.4. Summary Data and Graphics

Upon completion of the QA/QC process, the data summary and graphs associated with spreadsheet shall be printed. The statistical summary and graphs will be provided to the LDNR/CRD in two formats: 1) electronically and 2) a hard copy. The hard copy shall have the appropriate heading and content. An example shall be provided by the LDNR/CRD.

Yearly summary graphs shall be produced after the third data acquisition trip, these graphs shall be produced from the QA/QC'ed data and show the mean cumulative rate of accretion and the average rate of accretion for the data collection period. The LDNR/CRD shall provide examples of the graphs that are required for this deliverable.

9.5. Deliverables

Upon completion of the QA/QC process and the creation of the summary data and graphics, the original data sheets, field trip report, the QA/QC packet, the field notebooks, and all the associated electronic files shall be delivered to the LDNR/CRD. Electronic files containing the data shall be in the appropriate deliverable format (Appendix B, Format 6) once the data has completed the QA/QC process.

Yearly summary graphs and summary statistics shall be provided to the LDNR/CRD one month after the collection of the third data acquisition.

10. EMERGENT VEGETATION

Vegetation sampling has two objectives related to the evaluations of individual project and cumulative project effects. The first objective is to determine the vegetation type that dominates the sampling location. The second objective is to assess the relative vigor of the vegetation. Vegetation sampling is designed to reach these two objectives in both herbaceous marshes and forested swamps as well as to be able to document any changes that occur during the life of the project.

Emergent vegetation stations, either herbaceous marsh or forested swamp, shall be established away from spoil banks or any type of surface alterations that may have occurred from human modification. The purpose of emergent vegetation stations is to monitor the plant / tree community over time in its natural state. Therefore, any vegetation stations established in an altered community shall be re-established at the request of the LDNR/CRD.

10.1. Herbaceous marsh sampling

Vegetation sampling in herbaceous marshes will consist of ten replicate 2 m x 2 m stations located within a 200 m x 200 m square that also encompasses water level continuous recorders. Vegetation stations will be located randomly on a 282.8-m transect that cuts diagonally through the square from one corner to the opposite corner. Each 2 m x 2 m vegetation station shall be spaced a minimum of 3 m apart giving a possible 94 establishment points along the diagonal transect. Each of the establishment points along this transect marks the southeastern corner of a vegetation station. Stations have north-south and east-west oriented sides.

The orientation of the vegetation transect (i.e., either SW to NE or SE to NW) within the 200 m x 200 m site will be chosen randomly. A set of 94 random, non-duplicated numbers between 1 and 94 shall be selected, recorded to a table, and maintained with the site file. Each random number is then multiplied by 3 which represents the distance in meters that the vegetation station is located from SE or SW corner of the transect towards the opposite corner. The first 10 random numbers are primary locations for each vegetation station. If one of the primary stations is located in an area that is <55% marsh (i.e., the plot cannot be located in an area that is >45% continuous standing water), on a spoil bank, or within 10 meters of the RSET, marsh mat recorder, or any part of the boardwalk, the station will be dropped and a station from the secondary set will be used. This practice will assure that none of the data collection for other variables is compromised and that stations located in unvegetated marsh ponds or channels are excluded at the outset of monitoring. Station establishment is completed when 10 appropriate vegetation stations are positioned that neither interfere with other sampling stations nor are <55% marsh. Each station will be marked with a metal short stake (permanent marker) and a ½" diameter PVC stake that extends 6 feet above the marsh surface (for ease of locating the station).

Species composition and cover for each station will be determined using visual estimates of cover following the Braun-Blanquet cover scale (Mueller-Dombois and Ellenburg 1974). The 2 m x 2 m quadrat will be carefully placed on the vegetation and all vegetation within the quadrat, whether rooted within the station or hanging over the station, will be included in the sample.

The scale values and the corresponding Braun-Blanquet scale currently used by the LDNR/CRD for monitoring are provided in Table 2.

The relative vigor of the vegetation will be assessed using the total vegetative cover and the average height of the dominant plant species. A total vegetative cover value for the station will be determined to the nearest 5%. The precision of cover estimates may be affected by the potential of introducing bias from one individual to the next. Therefore, the same individual(s) shall conduct the visual estimates every sampling trip, if at all possible. Since overlapping canopies may be present, total vegetative cover may exceed 100%. Plant height will also be documented for each station. Five randomly located stems from the dominant plant species (species with the highest coverage of the station) will be measured to the nearest cm. On the natural vegetation sampling data sheet (Appendix A, Form 17), the average measurement and dominant plant name will be documented. Even if the station contains co-dominants, only one species' height will be measured and recorded.

Table 3. Vegetative cover values associate with the Braun-Blanquet method.

Cover Range	Braun-Blanquet
Solitary	R
Few	+
<1%	1
1.1-2%	1
2.1-5%	1
5.1-10%	2
10.1-25%	2
25.1-50%	3
50.1-75%	4
75.1-95%	5
95.1-100%	5

Qualitative observations are also important in evaluating changes in species composition and abundance over time. During each sampling trip, observations will be recorded regarding the presence or absence of chlorosis (vegetation is discolored or pale green/yellow), rack or debris on the marsh, herbivory damage is evident, and any evidence exists of recent marsh burning.

Every now and then a plant is not recognized by the identifier. The plant shall be listed as unknown followed by a number on the data sheet and described in the description section. The percent cover is assigned to the unknown plant species, if it is inside the station. The plant (or a representative part if only one plant is available) is then collected (preferably from outside the plot if one is nearby) and stored in a zip-lock bag or plant press. The bag or plant press is labeled with the plant number and the description such that when it is identified, the data sheet can be corrected.

Installation

The LDNR/CRD will provide DGPS coordinates in UTM, NAD83 Meters for the start and end of the diagonal vegetation transect as well as orientation/bearing. Prior to site establishment, a unique set of 94 random numbers between 1 and 94 will be selected for each site and maintained with the site file. The first 10 numbers will be arranged numerically from lowest to highest to expedite station establishment, to minimize backtracking, and to reduce unnecessary travel between sites. Each random number is multiplied by 3 to determine the distance in meters from the south end of the diagonal vegetation transect (either SW or SE corner of the 200 m x 200 m square) to the SE corner of the vegetation plot. Vegetation sampling can be carried out simultaneously with station establishment. When establishing the transect that is oriented in the SE to NW direction, one must be aware that traversing through the plot needs to be avoided.

Materials List (minimum)

This list of equipment and supplies is needed to establish and to sample vegetation stations in the herbaceous marshes of south Louisiana. Other equipment and/or supplies may be necessary depending on the site.

1. Metal pipes / rods: ½" diameter by 3' galvanized coated or stainless steel rods used as permanent station markers in case of fires
2. PVC pipes: ½" diameter by 10' pipes used as station locators in the thick, tall herbaceous vegetation (NOTE: Ends may be painted with a fluorescent paint to aid in locating vegetation stations)
3. 2 m x 2 m PVC square: four (4) 2-meter ¾" PVC tubes attached with L-joints or 90° fittings to form a square
4. Measuring tape/device: ½" fiberglass measuring tape capable of measuring 100 meters
5. Compass: 0° to 360° azimuth dial with 2° graduations
6. Random number table: Ninety-four (94) randomly chosen numbers between 1 and 94 with no duplicates. Each random number is then multiplied by 3. The first ten (10) numbers are arranged numerically from lowest to highest. <u>NOTE:</u> Each site must have a different set of random numbers.
7. Differential global positioning system (DGPS)

Herbaceous marsh community:

1. Using a DGPS, carefully approach the southerly end of the diagonal vegetation transect. This location will be the beginning point for the establishment of all the vegetation stations. <u>Remember:</u> Be very careful not to disturb the vegetation along the transect so that the data collection efforts are not compromised.
2. Using the random number table for that site, the diagonal transect bearing provided by LDNR/CRD (usually 135° or 225°), and a measuring tape, carefully move from the beginning point of the transect to the first vegetation station.
3. Using a compass, determine the orientation of the plot. The point on the diagonal transect is the southeast corner of the vegetation station.
4. Measure 2 m North and 2 m West from this point to determine where the plot will fall (or place the 2 m x 2 m PVC square on the marsh). Inspect the potential station to be sure

that the station is more than 55% marsh and that it is not within 10 meters of any of the other data collection stations (e.g., RSET, accretion, water level and/or salinity continuous recorder) or either of the boardwalks.

a. If Step 4 is true, then the station is established and the PVC pole and metal pipe can be placed in the SE corner to mark the station. Before leaving the station, record the actual coordinates using the DGPS. Collect no less than 10 readings with the antenna directly on top of the station marker on the southeastern corner. Label the coordinate with the appropriate station number.
b. If Step 4 is false, proceed to the next potential vegetation station using the next number from the random number set.

5. Continue step 2 until all 10 random numbers in the primary set have been used. Ten (10) stations shall be established at each site. Depending on the number of stations established from the first set, additional stations will be chosen from the secondary set to supplement the first set until a total of 10 vegetation stations have been established.

Alternative GIS Method for Station Establishment

Using ArcView or ArcGIS, the 200 m x 200 m square can be positioned over a DOQQ for each site. From the Graphics menu, the position (in UTM, NAD83 Meters) of each side of the 200 m x 200 m square is provided. Therefore coordinates (UTM, NAD83 Meters) for the SW and SE corner of the 200 m x 200 m square are easily determined by simply recording the two width values (Easting) and the greater of the two height values (Northing). The SE corner's coordinates are the lesser of the two width values and the height value while the SW corner's coordinates are the greater of the two width values and the height value. After the starting coordinates are determined and orientation of the diagonal transect (i.e., from SW to NE or from SE to NW) is randomly chosen, the coordinates for each vegetation plot can be calculated using the trigonometric function that sin θ = opposite side length / hypotenuse length or:

$$d = 0.7071r$$

Where: r is a random number between 1 and 94 multiplied by 3
d is the distance in meters on both the x and y plane from one end of the diagonal vegetation transect

For each station, a value d is calculated which represents both the change in Easting and Northing. For example, in a site in which the orientation of the diagonal transect is SE to NW, each vegetation station will be located at Easting of the SE corner - d, Northing of the NW corner + d (each vegetation station will have a unique r and d value). Conversely, a site in which the orientation of the diagonal transect is SW to NE, vegetation stations will be located at Easting of the NE corner + d, Northing of the NE corner + d. Ninety-four (94) vegetation station coordinates (9 in the forest community) shall be calculated using this method as each station will need to be ground-truthed to assure >55% marsh and proper distance from other sampling stations or may need to re-established during future sampling trips. A spreadsheet to calculate random numbers and subsequent vegetation coordinates may be provided by LDNR/CRD as needed.

Data Collection

Vegetation sampling shall occur during the 6 week period on or around September 15 to October 31. If 6 weeks is an insufficient period of time, sampling can began as early as September 1.

The data collection schemes between the herbaceous marsh community and the forested swamp community are different; therefore, the following procedures are to be used for the appropriate community. Two different data sheets will be utilized: herbaceous marsh community data sheet (Vegetation Sampling Data Sheet / Modified Braun-Blanquet Technique; Appendix A, Form 17) and "Forest Community Data Sheet" (Appendix A, Form 18).

The materials list above is also used during data collection. The random number table will be taken to the field during both the initial site establishment trip and all subsequent sampling trips. If a new station needs to be established, the next random number on the list will be used. The metal and PVC pipes will be needed if a station must be re-established. Reasons for station re-establishment include:

1. If both the metal and PVC pipes are removed or lost.
2. If a significant, unnatural anthropomorphic change to the study site has occurred (e.g., digging or dumping of soil at the site).
3. If the station becomes open water.

In the case of station re-establishment, LDNR/CRD shall be notified of the new GPS coordinates and reasons for re-establishment.

Herbaceous marsh community:

1. Using the poles established in the installation process, place the 2 m x 2 m PVC square such that the pole is the southeast corner of the station. The orientation of the station is north-south and east-west.
2. Using the "Natural Vegetation Sampling Data Sheet," completely fill out all the sample type, project, station, group, personnel, plot size, date, and plant community type before beginning the collection of data within the station.
3. Examine the entire vegetative community within the boundary of the station.
4. Fill out the cover percentages as they relate to the total cover (all plant types within the boundary of the station) and bare ground. Then begin to separate the plant types (tree, shrub, herbaceous, and carpet) and estimate the percentages.
5. In the species list section of the data sheet, record the scientific name of every plant species present in the station and place an "I" in the In/Out column of the data sheet.
6. Examine the entire station and give a cover percentage for each individual plant species present.
7. Examine the list of plants and their percent cover. Using the plant species with the most cover (dominant species), measure 5 stems of the plant and record an average height on the top section of the data sheet.
8. Repeat step 6 for the tree, shrub, herbaceous, and carpet layer, if they are present.
9. Examine the 4.6 meters (~15 feet) in all directions outside of the station and list the plant species found by their scientific name. Indicate if there outside presence by placing an "O" in the In/Out column of the data sheet. Note: some plants may be inside and outside

the station and can be documented by recording an "I/O" in the In/Out column of the data sheet in that species' row.

10. Proceed to the next vegetation station.

10.2. Forested swamp sampling

Vegetation sampling in swamps will consist of five replicate 20 m x 20 m stations located within a 200 m x 200 m square that also encompasses water level continuous recorders. Vegetation stations will be located randomly on a 282.8-m transect that cuts diagonally through the square from one corner to the opposite corner. Each 20 m x 20 m vegetation station shall be spaced a minimum of 30 m apart giving a possible 9 establishment points along the diagonal transect. Each of the establishment points along the transect marks the southeastern corner of a vegetation station. Stations have north-south and east-west oriented sides.

The orientation of the vegetation transect (i.e., either SW to NE or SE to NW) within the 200 m x 200 m site will be chosen randomly. A set of 9 random, non-duplicated numbers between 1 and 9 shall be selected, recorded to a table, and maintained with the site file. Each random number is then multiplied by 30 which represents the distance in meters that the vegetation station is located from the SE or SW corner of the transect towards the opposite corner. The first 5 random numbers are primary locations for each vegetation station. If one of the primary stations is located in an area that is <55% swamp or within 10 meters of the RSET, marsh mat recorder, or any part of the boardwalk, a station from the secondary set will be used. This practice will assure that none of the data collection for other variables is compromised and that stations located in unvegetated swamp ponds or channels are excluded at the outset of monitoring. Station establishment is completed when 5 appropriate vegetation stations are positioned that neither interfere with other sampling stations nor are <55% swamp. Each station will be marked with a metal short stake (permanent marker) and a ½ inch diameter PVC stake that extends 6 feet above the marsh surface (for ease of locating the station).

Composition and vigor of tree species will be determined using diameter at breast height (DBH) measurements of trees ≥ 5 cm DBH. Trees < 5 cm DBH will be counted by species. The DBH will be measured at a height of 137 cm above the forest floor (Avery and Burkhart 1994). Measuring an irregular tree trunk shall follow the methods prescribed in Avery and Burkhart 1994 (see descriptions below). Trees may be temporarily marked with chalk or paint to assure that each tree has been accounted for and measured as well as to prevent a tree from being measured twice. Measurements at understory stations will follow the measurements taken at marsh stations (see herbaceous marsh sampling).

Canopy coverage can be expressed as the percentage of ground covered by the forest canopy. That is, the amount of sky over an area intercepted by tree foliage. Canopy cover gives some indication of the amount of ground that is shaded by forest canopy, but it does not convey the deepness of that shade. It can be a very helpful measurement to determine changes in the forest over time (e.g., if the forest's canopy is thinning), to gauge light interception by the canopy, or in the calculation of productivity models for understory vegetation (Nutter 1997). Percent canopy cover will be measured from the center of each of the 20 m x 20 m stations using a convex densiometer outlined in the procedures below.

Installation

The LDNR/CRD will provide DGPS coordinates in UTM, NAD83 Meters for the start and end of the diagonal vegetation transect as well as orientation/bearing. Prior to site establishment, a unique set of 9 random numbers between 1 and 9 will be selected for each site and maintained with the site file. The first 5 numbers will be arranged numerically from lowest to highest to expedite station establishment and to reduce backtracking. Each random number is multiplied by 30 to determine the distance in meters from the south end of the diagonal vegetation transect (either SW or SE) to the SE corner of the vegetation plot. Vegetation sampling can occur simultaneously with vegetation station establishment. When establishing the transect that is oriented in the SE to NW direction, one must be aware that traversing through the plot needs to be avoided.

Materials List (minimum)

This list of equipment and supplies is needed to establish and to sample vegetation stations in the forested swamps of south Louisiana. Other equipment and/or supplies may be needed depending on the site.

1. Metal pipes / rods: ½" diameter by 3' galvanized coated or stainless steel rods used as permanent station markers in case of fires
2. PVC pipes: ½" diameter by 10' pipes used as station locators in the thick, tall herbaceous vegetation (NOTE: Ends may be painted with a fluorescent paint to aid in locating vegetation stations)
3. 2 m x 2 m PVC square: four (4) 2-meter ¾" PVC tubes attached via L-joints or 90° fittings to form a square
4. Measuring tape/device: ½" fiberglass measuring tape capable of measuring 100 meters
5. Compass: 0° to 360° azimuth dial with 2° graduations
6. Random number table: Nine (9) randomly chosen numbers between 1 and 9 with no duplicates. Each random number is then multiplied by 30 to provide distance in meters from the start of the diagonal transect to the SE corner of the vegetation station. The first five (5) numbers are arranged numerically from lowest to highest. <u>NOTE:</u> Each site must have a different set of random numbers.
7. Differential global positioning system (DGPS)
8. Diameter tape: fabric tape used to measure the diameter of trees in metric (centimeters)
9. Tree marking paint/chalk: used to mark trees that have been measured
10. Hammer and aluminum nails and/or tags: used to mark DBH measurements
11. Aluminum (or other light material) ladder: aids in reaching DBH on some fluted trees

Forested (Swamp) community:

1. Using a DGPS, carefully approach the southerly end of the diagonal vegetation transect. This location will be the beginning point for the establishment of all the vegetation stations. <u>Remember:</u> Be very careful not to disturb the vegetation along the transect so that the data collection efforts are not compromised.

2. Using the random number table for that site, the diagonal transect bearing provided by LDNR/CRD (usually 135° or 225°) and a measuring tape, carefully move from the beginning point of the transect to the first vegetation station.
3. Using a compass, determine the orientation of the plot. The point on the diagonal transect is the southeast corner of the vegetation station.
4. Measure 20 m North and 20 m West from this point to determine where the plot will fall. Inspect the potential station to be sure that the station has more than 55% swamp and that it is not within 10 meters of any of the other data collection stations (e.g., RSET, accretion, water level and/or salinity continuous recorder) or either of the boardwalks.
    a. If Step 4 is true, then the station is established and the PVC pole and metal pipe can be placed in the SE corner to mark the station. Before leaving the station, record the actual coordinates using the DGPS. Collect no less than 10 readings with the antenna directly on top of the station marker on the southeastern corner. Label the coordinate with the appropriate station number.
        i. Due to the size and vegetative composition a forested community, all four corners of the plot may need to be to indicate the boundary of the station. Different color paints may be used for each corner.
        ii. The northwest corner of the plot also needs to be established since a 2 m x 2 m station will be established in this area for herbaceous marsh community analysis
    b. If Step 4 is false, proceed to the next potential vegetation station using the next number from the random number set.
5. Continue step 2 until all 5 random numbers in the primary set have been used. Five (5) stations shall be established at each site. Depending on the number of stations established from the first set, additional stations will be chosen from the secondary set to supplement the first set until a total of 5 vegetation stations have been established.

Note: GIS station establishment can be used in the forest community but each random number is multiplied by 30 instead of 3 in determining distance in meters that vegetation station is located from the northerly end of the diagonal transect.

Data Collection

Vegetation sampling shall occur during the 6 week period on or around September 15 to October 31. If 6 weeks is an insufficient period of time, sampling can began as early as September 1.

The data collection schemes between the herbaceous marsh community and the forested swamp community are different; therefore, the following procedures are to be used for the appropriate community. Two different data sheets will be utilized: "herbaceous marsh community data sheet" (Vegetation Sampling Data Sheet / Modified Braun-Blanquet Technique; Appendix A, Form 17) and "Forest Community Data Sheet" (Appendix A, Form 18).

The materials list above is also used during data collection. The random number table will be taken to the field during both the initial site establishment trip and all subsequent sampling trips. If a new station needs to be established, the next random number on the list will be used. The

metal and PVC pipes will be needed if a station must be re-established. Reasons for station re-establishment include:

1. If both the metal and PVC pipes are removed or lost.
2. If a significant, unnatural anthropomorphic change to the study site has occurred (e.g., digging or dumping of soil at the site, logging activity).
3. If the station becomes open water.

In the case of station re-establishment, LDNR/CRD shall be notified of the new GPS coordinates and reasons for re-establishment.

Forested community:

Each 20 m by 20 m station will have a minimum of three completed datasheets when the sampling for the station is completed. One data sheet will be for the forested community that measures the tree community in the 20 m x 20 m station. The other two sheets will be for the herbaceous community that will be collected in 2 m by 2 m substations in the southeast and northwest corners of the overall station.

1. Determine the southeastern corner of the 20 m x 20 m station.
2. Orient with respect to the 20 m x 20 m station by finding the other pipes associated with the station during establishment.
3. In a systematic procedure, begin on one side of the station and work towards the other side. Each tree greater than 5 cm in diameter at breast height (DBH) shall be identified to species, tagged and numbered, the DBH shall be measured at the appropriate height, and the tree number and DBH shall be recorded on the data sheet.
    a. <u>NOTE</u>: DBH is approximately 137 cm (~4.5 ft) above the forest floor (Avery and Burkhart 1994).
        i. If the tree trunk is split below the 137 cm height then the diameter of the each fork is measured at 107 cm (~3.5 ft) above the split and this change is noted on the vegetation data sheet.
        ii. If the tree has a fluted bole (e.g., tupelo or cypress), DBH shall be measured 50 cm (~1.5 ft) above the point where the boles stops noticeably tapering and this change is noted on the vegetation data sheet.
        iii. If the tree is forked at or above 137 cm height, DBH is taken and 122 cm (~4 ft) and this changed is noted on the data sheet.
        iv. If other scenarios occur, refer to LDNR/CRD.
    b. It is important to mark the DBH point permanently for future replicated measurements, especially when the DBH point has been shifted up or down. The use of an aluminum tag or an aluminum nail is recommended by most foresters as aluminum will not harm trees or saws.
    c. Trees may be marked with tree marking paint/chalk to keep track of which ones have been measured.
4. The herbaceous stations are recorded using the same technique and same data sheet as the herbaceous marsh community (see procedure above). There are two substations per 20 m x 20 m stations. These substations are located at the southeast and northwest corner of the 20 m x 20 m station.

5. At the center (or as near to the center as possible) measure and record the percent canopy cover using the procedure below.
6. Proceed to the next station

Forested (Swamp) Site Canopy Cover:

Materials:

1-2" O.D. schedule 40 PVC, 4 ft long
4" x 4" square plate
Convex spherical Densiometer
Calculator
Rubber bands, blue tac, double sided tape, etc.

Construction:

The PVC will be cut so that both ends of the 4' length are as flat as possible while remaining perpendicular to the length of the pipe. The 4" plate will be centered and permanently affixed to one end of the pipe. This construction will allow the spherical densiometer to be placed on the plate and secured by 2 rubber bands or similar securing device to aid in steadying during data collection.

Data Collection:

One reading will be taken in the center of each of the five 20 m x 20 m forest vegetation plot within the 200 m x 200 m square. If it is not feasible to stand in the exact center, the closest possible location will be used as long as it is within the 20 m x 20 m plot and not within either of the 2 m x 2 m herbaceous vegetation plots.

The data collector should place the base of the pipe firmly on the ground so that the 4" plate is on top and close to level. Next, the spherical densiometer should be centered and secured to the top of the plate. The bubble level in the densiometer should be on the side closest to the data collector. The data collector should face due north and support the pole by holding it just below the 4" plate.

The data collector should stand approximately half an arm's reach away from the pole so that they cast no reflection in the mirror. They should also check and make sure that no other man-made structure is casting a reflection. If this is not the case, the item/structure should be moved prior to data collection. Finally, check to make sure the bubble level is centered before taking any readings on the spherical densiometer.

Once the densiometer is situated correctly, the percent canopy cover can be read. The convex mirrored surface is etched with 24 squares in a grid pattern. Each of these squares should be viewed as if subdivided into 4 smaller squares resulting in a total of 96 subsquares. Beginning at the top left of the grid, look at the first square and determine how many of its subsquares have cover in them. Figure 24 demonstrates examples of cover percentages in **one** of the 24 grid

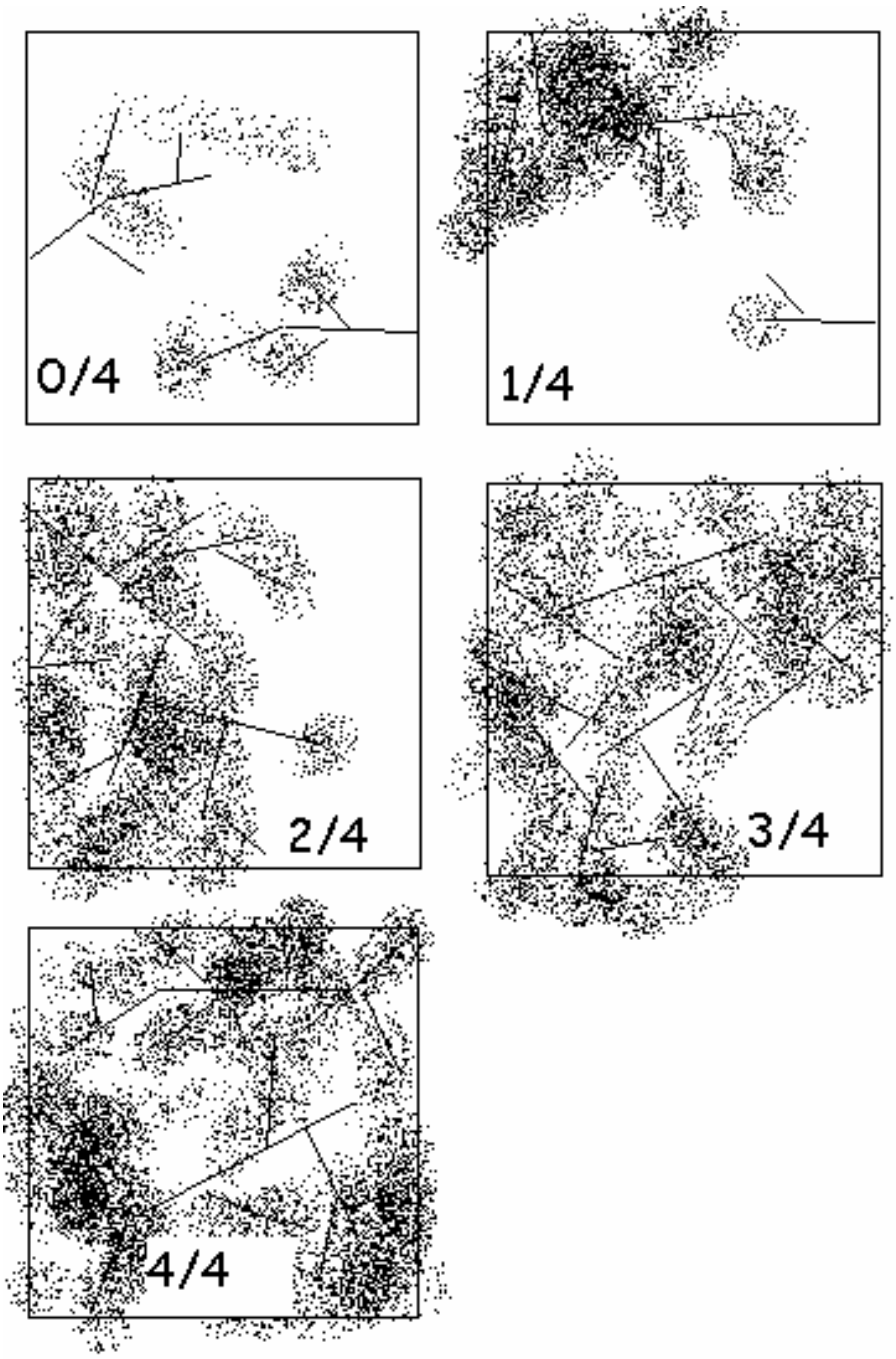

Figure 24: Examples of proper values given to canopy cover in one square of the densiometer. Each square of the densiometer is divided into 4 subsquares and thus each square is given a value between 0 and 4.

squares of the spherical densitometer. A value of 0-4 should be determined for each subsquare. Remember that percent cover of the canopy is used to determine the amount of light that penetrates the canopy and reaches the understory. Thus estimates should be judged on the amount of light that gets through. Continue moving in a systematic fashion until all 24 squares, hence all 96 subsquares, have been counted to provide a number from 0 to 96. Multiply that number by 1.04 and round to the nearest whole number to calculate percent cover of forest canopy. An alternative method for counting cover in locations with a large amount of cover is as follows. If your site has more than 50% cover, count the number of subsquares without cover and subtract that number from 96, then multiply the result by 1.04.

To ensure consistency and eliminate some of the inherent variability in reading canopy cover, a minimum of 2 (preferably 3) different field personnel should calculate percent canopy cover at the same site within a few minutes of each other (so as to eliminate time effects). These results should be averaged for the final recorded result. If the difference between any two of the readings is more than 25%, all field personnel should retake their readings and/or discuss differences of interpretation until a consensus is reached.

10.3. Data Processing

The samples collected in the field that were not positively identified must be examined by a qualified individual, a botanist or plant taxonomist. The plants shall be provided to the person as soon as possible before the integrity of the sample diminishes.

The data sheets must be examined for the proper spelling of each plant species. If the spelling in the field was incorrect then the spelling needs to be corrected prior to delivery to the appropriate LDNR/CRD office. This procedure is accomplished by drawing a single line through the name of the plant written in the field and the correct spelling placed adjacent to the misspelled name. The "authors" name shall be written in the correct form behind the name. The standard botanical name shall follow the USDA Plants Database on the World Wide Web (available at http://plants.usda.gov/). Since the cover percentage was recorded in the field for each species, the corresponding rank may not have been written in the following column. If the percent cover rank was not recorded in the field, use Table 3 to complete the column.

Once the data sheets have been corrected with respect to the unidentified plants and the author's names have been added to the data sheets, then the person responsible for the data collection can begin the two-phase approach established by the LDNR/CRD to ensure the accuracy of the data with respect to the database.

The LDNR/CRD has implemented a two-phase protocol for data processing. These two phases are referred to as data entry (Phase I) and data quality assurance / quality control (Phase II). These two phases are conducted by separate individuals to assure that the final product is in agreement 100% with the data collected during the field sampling procedure.

Data Entry (Phase I)

Phase I is conducted by the individual responsible for the field data collection. After completing the additions to the data sheets, photocopies are produced of the original data sheet(s). The original data sheets shall be filed systematically until both phases are complete and the LDNR/CRD has accepted the final product. The photocopied data sheets are used for data entry and throughout the QA/QC process. As part of the final deliverable product, LDNR/CRD requires the original data sheet(s) as well as the photocopies.

LDNR/CRD's Restoration Technology Section (RTS) has developed the Strategic Online Natural Resources Information System (SONRIS) database for the input and storage of vegetation data with respect to the herbaceous plant community. The individual responsible for phase I must follow the "User's Manual for Hydrographic and Emergent Vegetation Data Management" dated December 29, 2003. This manual ensures the proper transcription of data from the data sheet to the database. The individual must transcribe all the data requested by the database in the appropriate format as stated in the manual. Periodically this manual is updated; therefore, the most recent version of this manual must be used as it pertains to emergent vegetation

Since the LDNR/CRD/RTS has not developed a database with respect to the forested community for the measurements of each individual species, the LDNR/CRD has developed an Excel spreadsheet for this data. The Excel spreadsheet is a standardized spreadsheet that will be used to transfer the data from the spreadsheet to the database once the database has been established. It is important that the individual responsible for the data entry enter the data as requested with respect to the spreadsheet. The Excel spreadsheet provided by the LDNR/CRD is a template and shall be saved using the naming convention, station_forestcommunity_date.xls (CRMS0395_forestcommunity_September2005.xls).

Once the data have been transferred, a field trip report must be generated. The field trip report must include: 1) an explanation of any logistical problems encountered in the field, especially problems that may affect the data, 2) general weather conditions, 3) field personnel and their respective agency, company, or organization on the trip, 4) sites that were sampled, 5) type of sampling that took place, and 6) any notable biological activity or physical activity that may have altered the site.

When the data have been completely entered and the field trip report has been generated, the appropriate quality assurance / quality control (QA/QC) checklist (Appendix A, Form 11) is attached to the copied data sheet(s) and the field trip report. This compilation is referred to as the QA/QC packet. The QA/QC packet is sent to another individual for further examination and verification. This individual is referred to as the QA/QC officer.

Quality Assurance / Quality Control (Phase II)

Phase II begins with the transfer of the QA/QC packet to the QA/QC officer. The QA/QC officer immediately dates the packet upon receipt. Then the QA/QC officer will read the report and provide grammatical corrections, suggest clarifications, and comment as well as verifying

that all the necessary information is contained in the report. The QA/QC officer then compares the data sheet(s) with the SONRIS database and the Excel file. The QA/QC officer examines the SONRIS database according to the protocol set forth in the "User's Manual for Hydrographic and Emergent Vegetation Data Management" dated December 29, 2003 for any erroneous data or data that are questionable. The QA/QC officer also inspects the Excel spreadsheet with respect to the forest community data for any erroneous data or questionable data. If mistakes or questions arise, then documentation must occur on the QA/QC checklist. At times it may be beneficial to place removable (e.g., Post-it) notes on the photocopied data sheet. Once the packet has been review, the QA/QC officer shall initial and date all portions of the QA/QC checklist that are in accordance with the questions provided on the QA/QC checklist. Those areas that possess errors or present questions for clarification shall be address by the person responsible for Phase I.

Once the data collector has corrected or answered the problems found by the QA/QC officer, the QA/QC packet is again delivered to the QA/QC officer. The QA/QC officer examines the questions and verifies that all the data and information are 100% correct. This process will continue until the SONRIS database, the Excel file and the field trip have been accepted by the QA/QC officer. Upon acceptance of the packet, the QA/QC officer will initial and date the rest of the QA/QC checklist.

After the QA/QC packet has been finalized, the data collector or the QA/QC officer must obtain the original data sheets. If problems were found with the data sheet(s) during the QA/QC process, then the original data sheets must be corrected. This process shall be carried out by using black ball point ink pen. No one shall erase any data or information on the original data sheet. The proper procedure will be to draw a single line through the error and place the correction as close to the error as possible. The person will also place their initial and the data next to the correction.

10.4. Summary Data and Graphics

Upon completion of the QA/QC process, the data summary and graphs associated with data shall be produced. The LDNR/CRD has developed statistical programs and graphs to display the data. These programs and graph templates shall be provided to ensure standardization among the analyses and graphic display for easy comparisons.

10.5. Deliverables

Upon completion of the QA/QC process, the original data sheets, field trip report, QA/QC packet, field notebooks, summary data and graphs, and all associated electronic files shall be delivered to the LDNR/CRD. Electronic files containing the data shall be in the appropriate deliverable format (Appendix B, Format 7 & 8) once the data has completed the QA/QC process.

11. SOIL PROPERTIES

The soil properties of concern to the LDNR/CRD include but are not limited to soil pH, soil salinity (EC), bulk density, soil moisture, percent organic matter (loss-on-ignition), and wet/dry volume. Soil pH is determined through a standardized procedure on both wet and dry soils (Appendix C, Lab Protocols). The average of replicate samples for both saturated and dry pH measurements will be reported for each sample as the ratio of wet saturated and dry soil pH indicates the potential for pyrite formation. Soil salinity is determined by laboratory measurements of a saturated sample's electrical conductivity (Brady and Weil 2002). The average of replicate samples for electrical conductivity is reported in both mS/cm and ppt. Bulk density is defined as the total weight of material, both organic and inorganic fractions, in a known volume of sample and is given in units of grams per cubic centimeter (g/cm^3). Bulk density of organic wetland soils can be as low as 0.01 g/cm^3, but is commonly around 0.2 to 0.3 g/cm^3. In mineral soils in wetlands, bulk density can be as low as 0.5 g/cm^3, but is usually between 1 and 2 g/cm^3. Soil density in wetland soils is controlled by the amount of mineral material that infiltrates the organic material framework in highly organic marsh soils. Soil moisture will be determined through the drying process for bulk density and is calculated as a percentage from the wet and dry sample weight. Percent organic matter is determined by the amount of weight loss upon ignition at 550°C (Andrejko et al. 1983). Soils composed completely of organic matter will lose 100% of sample matter on ignition. Both wet and dry volume of each sample will be determined and the ratio of wet to dry volume will be calculated. The wet/dry volume ratio provides the potential for linear compaction for each sample.

Several core extraction devices have been designed for use in wetlands. The ideal core tube is sharpened on the bottom so that the root mat can be cut as the core tube is slowly inserted. A clear core tube may also be beneficial as any compaction can be identified before the core is fully extracted and adjustments can be made. Many corers have been designed to facilitate the process of extracting cores with the least amount of marsh disturbance and compaction (e.g., Swenson 1982, Hargis and Twilley 1994, Meriwether et al. 1996). Any combination of core tube materials and caps may be used to obtain cores as situations require as long as the inside diameter of the tube is 4" and cores can be sliced into 1.57" (4 cm) increments in the field. As minimizing the compaction of soil inside the core tube and reducing damage to the marsh are paramount, LDNR/CRD suggests the use of a Meriwether corer (Meriwether et al. 1996) to collect 30-cm deep cores (Figure 25). This corer has been documented to work well in saturated and semi-saturated salt and brackish marsh soils. Field personnel shall determine the best core and method to use in each situation.

11.1. Field Station Establishment

Soil samples shall be collected from CRMS-*Wetlands* sites within a year of site establishment. Cores will be taken 32.8 to 65.6 ft (10 to 20 m) away from the CRMS site (boardwalk) and at least 32.8 ft (10 m) from other CRMS sampling stations (Figure 26).

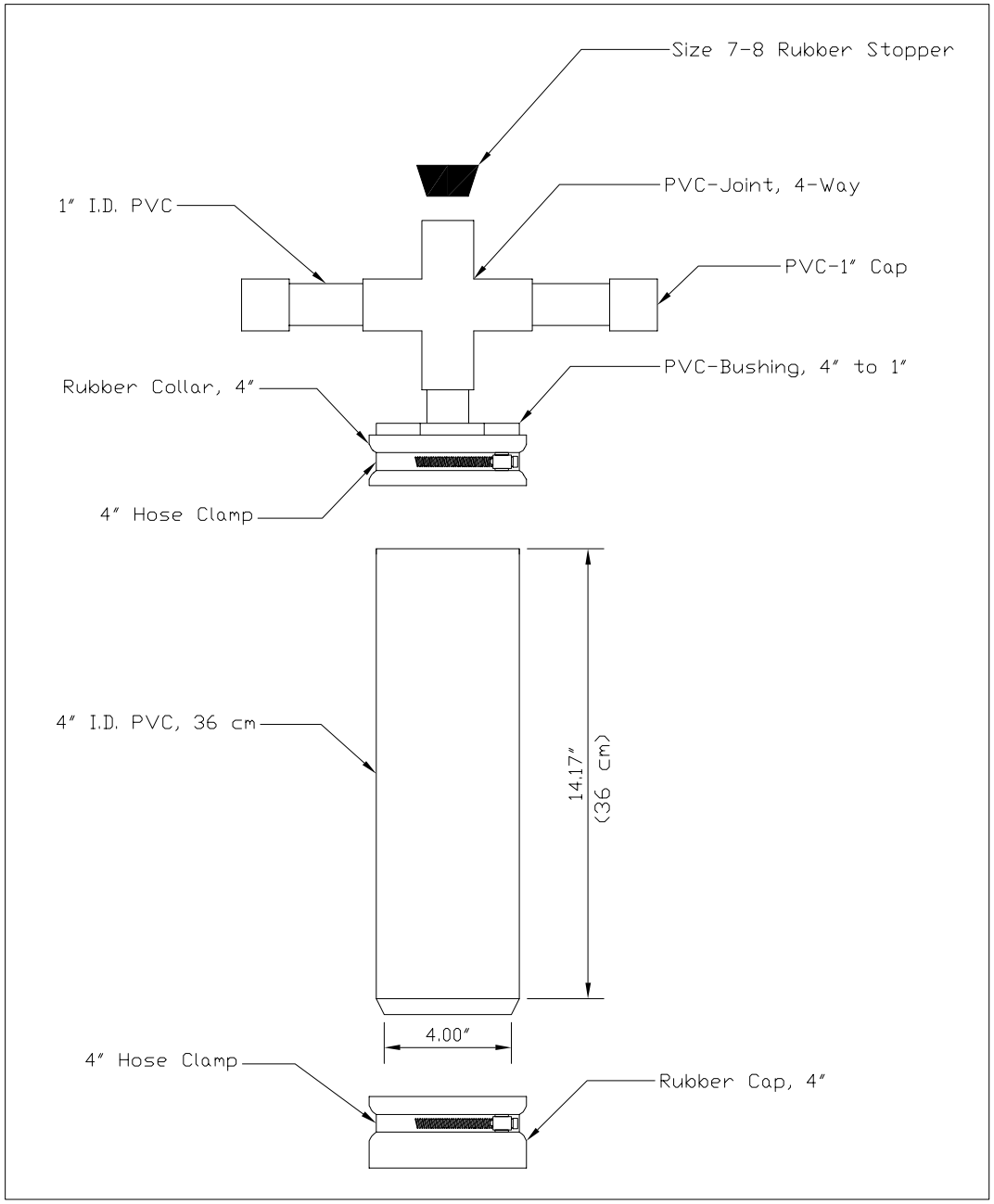

Figure 25: Typical specifications of a core extracting device (modified from Meriwether et al. 1996 and Phillips 2002).

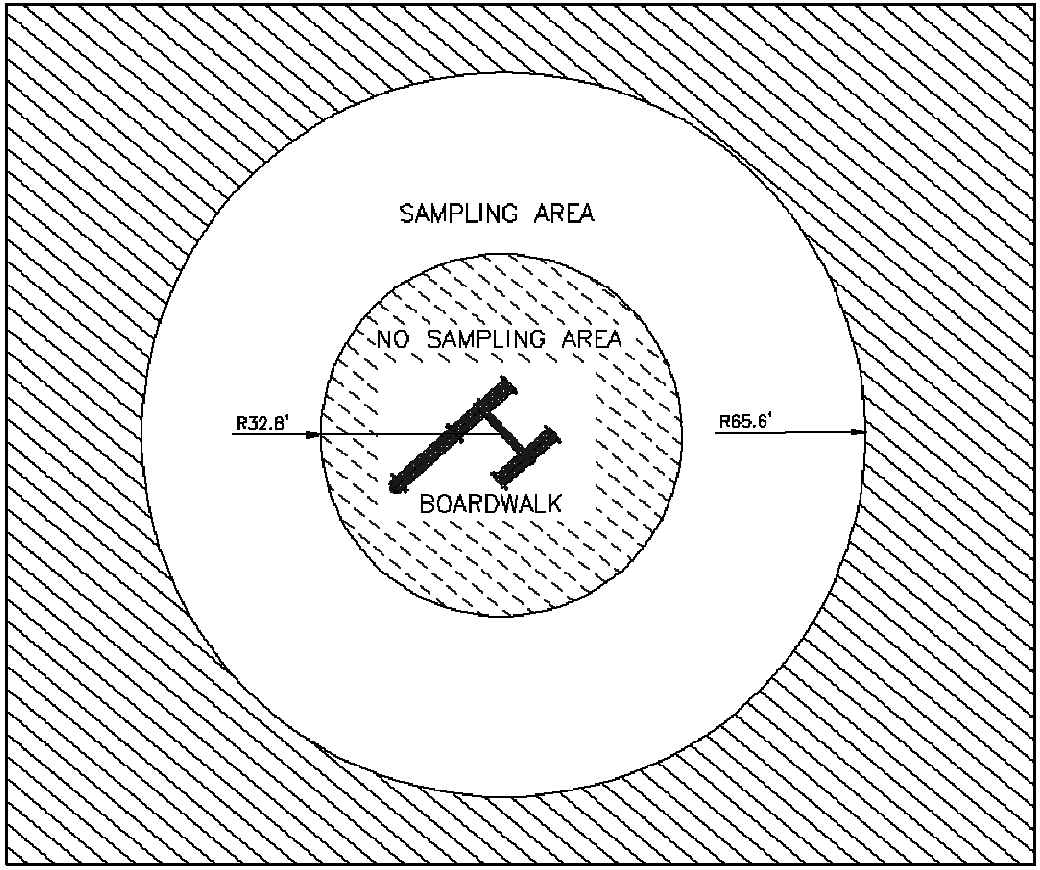

Figure 26: Diagram of CRMS site boardwalk area and the area available for sediment sample collection. Field personnel shall not collect soil cores or step within the 32.8-foot (10-meter) buffer around the boardwalk. Soil samples shall be collected within 65.6-foot (20-meter) from the boardwalk. Note potential future vegetation stations should be avoided.

Note that the sediment cores will not be taken from the boardwalk. Cores will be taken in the same marsh type as is represented by the CRMS site at the boardwalk. Cores will be taken on a surface that is representative of the area (i.e., not on obvious high or low points, on clumps, or in trenasses). Every attempt shall be made to take cores on a similar surface in each Visser marsh type (e.g., between culms of grass in *Spartina patens* dominated marsh). Cores will be taken at least 16.4 ft (5 m) from each other. Detailed guides for deciding where to take soil cores are described below in section 11.2 Data Collection, Procedures. Care should be taken not to damage the marsh when extracting/extruding cores (e.g., utilizing a platform such as a plywood sheet on the marsh) and that core locations do not interfere with future monitoring activities such as future monitoring activities (e.g., vegetation stations).

11.2. Data Collection

Soil cores shall be collected carefully to obtain a known volume of soil with little to no compaction of the soil matrix. Field personnel will collect three (3) soil cores with an inside diameter of 4" (10.2 cm) to a depth of 11.8" (30.0 cm) from each CRMS-*Wetlands* site. Cores will be extruded in the field using a precise core-extruding device (Figure 27) and sliced in the field into 1.57" (4 cm) increments to a depth of 9.45" (24 cm). The remainder of the core is discarded after the total depth of the core is determined by extrusion and recorded in the appropriate space on the data sheet (Appendix A, Form 19). Core samples will be placed on ice immediately after collection and delivered to the contracted soils lab in labeled storage bags (or containers) along with documentation as required by the lab (chain of custody sheet; see Appendix C, Lab Protocols). LDNR recommends the use of Glad® quart and gallon size storage bags as they can withstand oven temperature of 140°F (60°C) for several days and will not melt during the sample drying process in the lab. A copy of the soil core field data sheet will be provided to LDNR within one week of soil core collection.

The Meriwether corer includes a coring handle constructed of PVC with rubber attached to the top of the core tube. The handle is attached to the core tube and the tube is slowly inserted into the soil to a depth of 30 cm, slowly cutting through the root zone by turning the core tube as it is inserted. Measurements of the depth of insertion from the top of the core tube to the soil surface both inside and outside of the core tube are then made and recorded in the correct spaces on the cores field sheet (Appendix A, Form 19). Note that the Meriwether coring handle must be removed to make these measurements. The head space in the top of the core and handle is filled with water from the nearest source and is stoppered to create a seal. The core is then slowly pulled from the wetland and a rubber cap is placed on the bottom of the core as it emerges. The Meriwether corer facilitates core extraction without digging or losing core material from the bottom of the core. It may be necessary to cut the root zone as the core tube is inserted and to use clear core tubes to help reduce compaction.

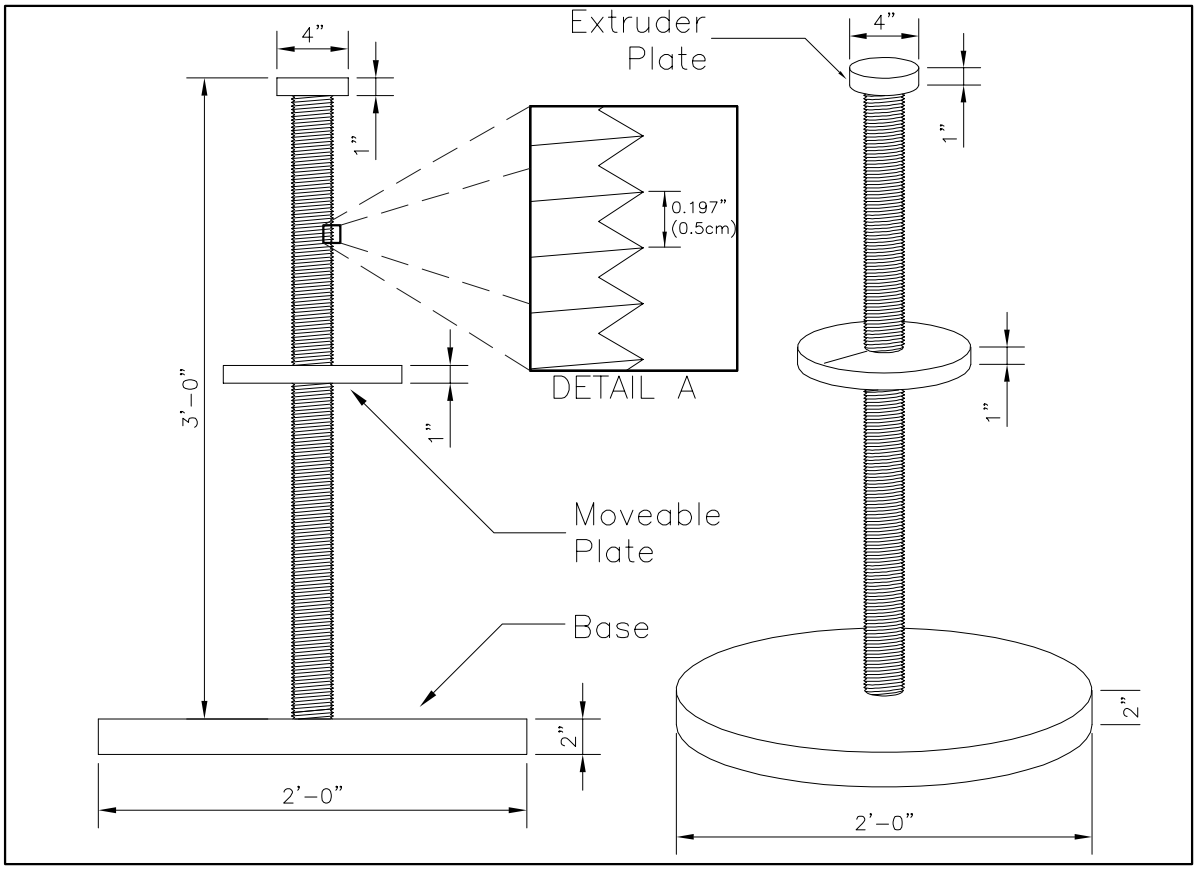

Figure 26: Typical construction diagram for the soil core extruder (redrawn from Phillips 2002). The 4-inch extruder plate fits tightly inside the core tube. A moveable plate (diameter typically ~6-8") moves up or down the lead screw with a precise pitch of 0.197" (0.5 cm) per 1 revolution. The extruder is constructed of PVC and custom machined.

Some sites may have soils that are too fluid or unconsolidated to extrude and slice with any precision. Two (2) attempts will be made to obtain cores that can be sliced. If cores cannot be sliced, three (3) cores shall be collected from those sites to a depth of 5.9" (16 cm) using a 4" (10.2 cm) diameter core tube sharpened on the end. For the 5.9" (16 cm) deep, un-sliced samples, a large stopper or cap should be placed over the top of a 5.9" (16 cm) core tube. A sharpened aluminum tube may be best for this application. The handle is not necessary for the shallow sediments. The top of the core should then be stoppered or capped and the core should be extracted by hand and quickly capped on the bottom.

Problems will be encountered from site to site. There may be better core sampling conditions on some days than others. At each CRMS site, the best coring method should be determined and utilized. Refer to the detailed procedures provided below. Detailed notes should be recorded in the given blanks on the sediment cores field sheet (Appendix A, Form 19). The entire 5.9" (16 cm) core sample (including interstitial water) should be placed on ice in a labeled gallon-sized Glad® storage bag (or other container) and delivered to the contracted soils lab.

Field Materials List

1. Three (3) sharpened 4" (10.2 cm) inside diameter core tubes at least 11.8" (30 cm) long. Core tubes can be acrylic, aluminum, or PVC. Tubes 14.2" (36 cm) long are recommended as rubber boot on Meriwether corer covers 2.4" (6 cm) of the core tube.
2. Sharpened 4" (10.2 cm) inside diameter core tube exactly 5.9" (16 cm) long or with 5.9" (16 cm) from bottom clearly marked/etched on the core tube.
3. PVC Meriwether corer with rubber boot.
4. Carboy, or other container, for transporting water from nearest source to coring site for use with Meriwether corer.
5. Rubber stopper to fit top PVC opening of Meriwether corer (size 7 – 8).
6. Six (6) 4" (10.2cm) rubber core end caps with tightening bands.
7. Nut driver that fits tightening bands (0.5").
8. Large rubber stopper or cap (large enough to fit in 4" (10.2 cm) core tube)
9. Soil core extruder with 4" (10.2 cm) extruder plate attached.
    a. Machined to 0.5 cm per revolution.
10. Serrated knife (at least 6" long) for core slicing and root zone slicing.
11. Sheet of plywood (~4'x4').
12. Eighteen (18) labeled Glad® quart sample storage bags. Label should include CRMS-*Wetlands* site number, core number, and sample depth (i.e., 0-4 cm, 4-8 cm, etc.). An additional three (3) large, labeled storage bags to be used for 16-cm cores if soils are too fluid to extrude and slice.
13. Additional storage bags large enough to hold all five samples from each core.
14. Ice chest and ice for sample storage and transportation.
15. Soil Core Field Data Sheet (Form 19).
16. Chain of custody sheet (see Appendix C).

Procedures

The following section describes the procedure for identifying the location for soil core collection at each CRMS site and for collecting the core samples.

Soil Core Decision Tree and Extraction Protocol

1. Core samples shall be collected outside of a 32.8 ft (10 m) radius but within a 65.6 ft (20 m) radius of the sampling platform and at least 32.8 ft (10 m) from any other sampling plot? If you are within this zone, go to the next step. If no, relocate core sampling area.
2. Are you in an area/vegetation type representative of the 200 x 200 m plot? If yes, go to the next step. If no, relocate and go to #1.
3. Are you away from any obvious high or low spots? If yes, go to the next step. If no, relocate and go to #1.
4. If this is the 2nd or 3rd core, are you at least 16.4 ft (5 m) from the previous core location? If yes, go to the next step. If no, relocate and go to #1.
5. Take 11.8" (30 cm) core.
6. To collect the core sample, use a 4" (10.2 cm) inner diameter (ID) sharpened core tube (Figure 25). Sharpened clear acrylic, thin-walled aluminum, or PVC core tubes may be utilized.
7. SLOWLY depress the core tube into the sediment using a rotating/twisting motion to assist in cutting root and peat material in order to minimize compaction. Unless the core tube is sharp enough to easily penetrate the soil and root/peat material, it may be necessary to cut around the base of the core tube straight up and down with a serrated knife through the root zone before inserting core tube into the soil.
8. Depress the core tube to 30 cm depth or greater while continuing to rotate/twist the tube. Take care not to compact/compress the soil inside the tube.
9. To document compaction, measure the distance to the sediment surface on the outside and inside of the core tube. Measurements should be made at the same place on the outside and inside of the core tube to avoid differences in ground height caused by uneven surfaces or vegetation density. If using the Meriwether corer, the cap should be removed or measurements should be taken through the cap before the cork is inserted as best as possible given the soil consistency.
10. Record both measurements on the soil core field data sheet (Form 19).
11. Core compaction should be 10% or less (i.e., <3 cm for a 30 cm core) in most soil types. Highly organic soils (e.g., floating marsh, flooded swamp sites) may have a compaction rate of up to 20%. All caution should be taken to obtain cores with a minimal amount of compaction.
12. Plug or cap the top of the core tube to assure suction, filling the head space with water from the immediate area if using the Meriwether corer. If the soils are not saturated, no water should be added to the head space.
13. Remove the core from the marsh and quickly cap the bottom of the core tube to avoid loss of material.
14. Remove the bottom cap from the core tube and place the core tube on the core extruder.
15. Remove the stopper from the Meriwether corer to break the seal and removed the coring handle.

16. Position the core extruder plate so the surface of the soil core is at the top of the core tube.
17. Is the soil core solid enough to extrude and slice? If yes, go to the next step. If no, discard the soil core material away from all sampling areas and go back to #5 above and take a second core. If the second core attempt results in a core too fluid to be sliced, go to #22 below.
18. Extrude the top 4 cm of the soil core (0-4 cm), carefully slice, and place in a pre-labeled Glad® bag or other air-tight container. This container will be used in the laboratory during the drying process and will be heated to 60°C (140°F). It must be able to be heated to this temperature without melting, changing composition, or reacting with the sample. Any sample remaining on the knife should be included with the sample.
19. Repeat for remaining intervals (4-8, 8-12, 12-16, 16-20, 20-24 cm).
20. Repeat until three (3) viable cores have been taken and processed.
21. Place all soil samples on ice and transport back to lab.
22. If the soil core is too fluid to be sliced (determined in step 17, above), take a 16 cm core using the following protocol (#23-33).
23. Use a 4" inner diameter (ID) sharpened clear acrylic, thin-walled aluminum, or PVC core tube. The Meriwether puller should NOT be used for this application. The core should be capped/stoppered and dug out supporting the bottom with a core cap as described below (#29-30).
24. SLOWLY depress the core tube into the sediment using a rotating/twisting motion to assist in cutting root and peat material in order to minimize compaction. Unless the core tube is sharp enough to easily penetrate the soil and root/peat material, cut around the base of the core tube straight up and down with a serrated knife through the root zone before inserting core tube into the soil.
25. Depress the core tube to 16 cm depth while continuing to rotate/twist the tube. Take care not to compact/compress the soil inside the tube.
26. To document compaction, measure the distance to the sediment surface on the outside and inside of the core tube. Measurements should be made at the same place on the outside and inside of the core tube to avoid differences in ground height caused by uneven surfaces or vegetation density.
27. Record both measurements on the soil core field data sheet.
28. Core compaction should be 10% or less (<1.6 cm for a 16 cm core) in most soil types. Highly organic soils (e.g., floating marsh, flooded swamp sites) may have a compaction rate of up to 20%. All caution should be taken to obtain cores with a minimal amount of compaction.
29. Plug or cap the top of the core tube to assure suction. Any head space should NOT be filled with external water for this application.
30. Dig a narrow trench around one side of the core tube and place a flat, rigid object under the core tube to avoid loss of material upon removal from the marsh.
31. Extrude the entire 16 cm core, including all indigenous water in the core tube, into a pre-labeled gallon size Glad® bag or other air-tight container as a composite sample. This container will be used in the laboratory during the drying process and will be heated to 60°C (140°F). It must be able to be heated to this temperature without melting, changing composition, or reacting with the sample.
32. Repeat until three (3) viable cores have been taken and processed.
33. Place all soil samples on ice and transport back to the lab.

Eighteen samples, or three from un-sliceable sites, shall be delivered to the contracted soils laboratory within 48 hours of collection. Samples shall be stored on ice from collection to delivery. Soil sampling, storage/transportation, and sample preparations shall follow methods prescribed by the contracted soils laboratory (Appendix C, Lab Protocols). The original soil cores field data sheet should be delivered to LDNR/CRD within one week of core sampling. Field samples will be transported and stored at approximately 39°F (4°C).

The field data sheet (Appendix A, Form 19) shall be filled out completely. Naming conventions for cores to be recorded in the 'CoreID' field shall be "CRMS_0000_S01", "CRMS_0000_ S02", and "CRMS_0000_ S03". After the core has been inserted into the soil matrix, measurements of the distance (cm) from the top of the core tube to the soil surface on both the inside and outside of the core tube should be recorded in the appropriate blanks on the field sheet. Additional measurements that are to be noted on the field sheet about each core include the exact length of the core tube being utilized (cm) and the depth of material that was extruded from the core when it was sliced (cm). The latter measurement can be obtained by continuing to extrude the core down to the bottom after it has been sliced, noting the number of 0.5 cm revolutions required to reach the bottom of the core. These measurements will be used to calculate two types of compaction: compaction due to extraction or core sampling and compaction due to extrusion and core slicing. These numbers will be used to assess core quality. Compaction due to extraction is calculated as:

$$\%Compaction^1 = ((INSIDE-OUTSIDE)/(Depth\ Inserted))*100$$

and compaction due to extrusion is calculated as:

$$\%Compaction^2 = ((Depth\ Extracted - Depth\ Extruded)/Depth\ Extracted)*100.$$

Compaction due to extraction should be minimized as much as possible by inserting the core tube slowly, using a cutting blade, and using clear acrylic tubing to see inside the core as the core tube is depressed. Other descriptive information about each core should be included on the core data sheet including site characteristics, soil characteristics, and core method.

Flotant Mat Shear Strength

A torvane strength tester shall be used to determine the shear strength in flotant marsh soils (or similar saturated cohesive soils) either in the laboratory or the field (McGinnis 1997). These instruments measure the torque (kg/cm^2) required to shear through, or deform, the soil (known as failure). A torvane is composed of a toothed plate (a vane) and a spring-loaded torque meter (driver). The torvane is inserted into a flat-surfaced soil in the field or into a soil sample to the depth of the teeth on the vane (~0.5 cm). The torque, or shear strength, is obtained by rotating the driver with constant pressure (torque) until failure occurs. The torque required to shear the sediment along the vertical and horizontal edges of the vane is a relatively direct measure of the shear strength of the mat. With some torvanes, shear strength must be normalized to the vane constant, which is a function of the vane size and geometry. However, most manufacturers (e.g., ELE International, Humboldt Manufacturing, Durham Geo) produce a hand-held torvane that directly returns a measure of shear strength from calibrated springs.

11.3 Data Processing

The cores will be analyzed for soil pH, soil salinity (EC), dry bulk density, percent soil moisture, percent organic matter (loss-on-ignition), and wet/dry volume by a contracted laboratory following the procedures outlined in Appendix C, Lab Protocols. Data will be stored digitally by the lab in the appropriate format (Appendix B, Format 9).

Data Entry (Phase I)

The contractor will obtain the sample analysis data from the contracted laboratory. Data will be checked for completeness and consistency. Ensure that the data are within a logical range for each parameter measured (Table 4). If any data are deemed illogical, contact the contracted laboratory and resolve the discrepancy. Verify that the soil cores field data sheet is complete.

Table 4. Soil parameters to be measured by the lab and their associated units with acceptable ranges.

Parameter	Acceptable Range
Soil pH	0 to 14
Soil salinity (EC)	0 to 90 mS/cm
Soil salinity (EC)	0 to 60 ppt
Bulk density	0.01 to 2.0 g/cm^3
Soil moisture	0 to 100%
Percent organic matter (LOI)	0 to 100%
Wet volume	324.29 cm^3 or 1297.17 cm^3
Dry volume	less than wet volume (cm^3)

Quality Assurance / Quality Control (Phase II)

Once the data from the laboratory has been checked and accepted by the contractor, wet pH, dry pH, soil salinity (ppt), bulk density (g/cm^3), soil moisture (%), percent organic matter (%), and the calculated wet/dry volume ratio should be graphed as a soil profile with depth on the Y-axis and the mean value ± standard error of the three cores from each site on the X-axis. The variability within the three cores for a site at a depth should be low (less than 5%). If not, re-check data from the laboratory for correctness. Note any large variability in a parameter at a site in the QA/QC checklist (Appendix A, Form 20). Verify that the contracted soils laboratory followed their own QA/QC protocols.

11.4 Summary Data and Graphics

Provide the produced graphs described above for each of the seven (7) measurements for each site to LDNR/CRD.

11.5 Deliverables

QA/QC'd data shall be placed on the ftp site in the "Soil Properties" folder in a comma delimited format with one file for each CRMS site. Data shall be stored in the appropriate format (Appendix B, Format 19). In addition, all QA/QC files and raw data files, both from the contracted soils laboratory and those produced by the contractor, shall be delivered in electronic format to LDNR/CRD along with the soil cores QA/QC Checklist (Appendix A, Form 20) and produced graphs. The original sediment cores field sheet and field trip report shall be delivered to LDNR/CRD within a week of the soil cores collection field trip.

12. ELEVATIONS

The Louisiana Coastal Zone (LCZ) Primary GPS Network was developed to provide consistency between all horizontal and vertical reference data collected. By utilizing this network, water elevation (continuous and monthly) and marsh elevations can be compared among stations throughout the coastal zone. In order to achieve consistency between data collection stations with respect to elevation, "A Guide to Minimum Standards Required by Louisiana Department of Natural Resources, Coastal Restoration Division For Contractors Performing GPS Surveys and Establishing GPS Derived Orthometric Heights Within the Louisiana Coastal Zone Primary GPS Network" dated June 2003 was developed as a minimum standard to be utilized by all surveyors installing deep rod secondary monuments and tying in the monument to the network for the LDNR/CRD.

From the deep rod secondary monuments that have been surveyed into the network, real-time kinematic (RTK) survey technology has facilitated accurate surveying in remote locations through the use of satellites. RTK shall be utilized to establish elevations on the various pieces of equipment used to collect data and to establish marsh elevations. Using RTK technology limits the distance from the secondary monument to a maximum distance of three miles unless the surveying crew advises differently or technological advances increase the range while maintaining the accuracy.

RTK is performed by setting up a RTK base station on an accepted LCZ secondary monument and the rover unit receives differential corrections from the base station. Because these two units communicate using radio waves, as the rover extends beyond the three mile radius and/or obstacles emerge between the units, the signal weakens and the degree of accuracy becomes no longer acceptable. Quality assurance checks shall be performed to confirm the instruments are working correctly near the base station before surveying begins and during the actual elevation determinations. When establishing an elevation point on the continuous recorder, static floating marsh system, and RSET monument or establishing the staff gauge to the vertical datum, two measurements are obtained to verify that the readings are within the acceptable range of 1.22 cm (0.04 feet). One measurement is obtained by collecting the average elevation for all readings during a three minute observation. The second measurement is a check that averages the elevation during a 3-5 second observation. If the two elevations differ by more than 1.22 cm (0.04 feet), measurements shall be performed again until the readings are within the acceptable tolerance of the instrumentation being used to perform the elevation determinations. All observations must be stored in the unit to verify that the readings are correct and the unit was working properly. With respect to marsh elevation determinations, each observation shall last a minimum of 30 seconds.

In an effort to reduce complications associated with the collection of elevation data between two instruments in close proximity to each other and to guarantee previously collected data can be adjusted to the latest survey, the LDNR/CRD has developed an Excel spreadsheet and data sheet. Since RTK enables the elevation of the surveyed object to be displayed in the field, the data sheet shall be completed in the field and all values shall be calculated to verify all the gauges and readings are within the acceptable 1.22 cm (0.04 ft) range. The data sheet 'Continuous Recorder

and Staff Gauge Survey Data Sheet' (Appendix A, Form 3) precisely labels each column as well as provides a description of each column. Upon completion of the data sheet, a correction factor shall be generated to apply to previously collected data if a staff gauge existed at the site prior to the survey. The water elevation at the continuous recorder and the staff gauge reading after adjustment or establishment shall be verified to assure the two gauges are within the acceptable range. This is accomplished by reviewing the last column "water elevation" for the continuous recorder and the "staff gauge" (after establishment or adjustment) for the staff gauge.

12.1. Continuous Water Level Recorders

Upon arrival at the continuous recorder station, a nail on the wooden post approximately twelve inches from the top or a ¼" hole on the stainless steel mono-pole approximately eight inches from the top shall be located. If the nail or hole does not exist, it shall be established. The elevation of the nail or the top of the hole shall be determined as well as the elevation of the water at the time of the survey.

Documentation of all the necessary elevations and measurements shall be written on the "Continuous Recorder Water Level Sensor Data Sheet" (Appendix A, Form 4). With respect to the continuous water level recorder, the top portion of the data sheet shall be completed. Completion of this section provides the LDNR/CRD sufficient information to convert the data from the recorders to a vertical datum. Moreover, it provides sufficient information for quality assurance and quality control. Beneath the table, each individual column is explained with respect to where the elevation or measurement between two points shall be acquired.

12.2. Staff Gauge

Often times a staff gauge has been established prior to the LCZ Primary GPS Network or the LDNR/CRD decides to adjust the staff gauge as a result of advances in technology; therefore, it is essential that sufficient information is collected to adjust previously collected data to the latest survey. To ensure that previously collected data can be adjusted to the latest survey, a staff gauge reading prior to the adjustment shall be obtained. On the lower section of the continuous recorder and staff gauge survey data sheet, all the information necessary to adjust the previously collected data shall be documented.

For those sites that will establish a staff gauge for the first time, current protocol requires that staff gauges are established using the method set forth in section 2.6 with a final establishment that resembles Figure 11. Staff gauges shall be established to the vertical datum, NAVD 88, Feet.

Documentation of all the necessary elevations and measurements shall be written on the "Continuous Recorder Water Level Sensor Data Sheet" (Appendix A, Form 4). With respect to the staff gauge, the lower portion of the data sheet shall be completed. Completion of this section provides the LDNR/CRD sufficient information to convert the previously collected data to the current survey. Moreover, it provides sufficient information for quality assurance and quality control with respect to the water elevations between the two gauges, if both exist.

Beneath the table, each individual column is explained with respect to where the elevation or measurement between two points shall be acquired.

12.3. RSET

The elevation for the top of the rod (Figure 6) shall be determined in NAVD 88, Feet and a measurement to the top of the collar shall be documented. No data sheet exists for this variable; however, a drawing of the station, the elevation of each point, and the elevation determination points shall be recorded with clarity in the surveyor's field notebook.

12.4. Static Floating Marsh Elevation

An elevation shall be established on the static floating marsh recorder at the top of the ¼" hole that was established during installation. No data sheet exists for this variable; however, a drawing of the station and the elevation of the hole shall be recorded with clarity in the surveyor's field notebook.

12.5. Marsh Elevations

Marsh elevations used to determine the depth and duration of flooding with respect to the continuous water level data shall be determined at a minimum of 20 points that are separated by 20 to 40 feet. Marsh elevations shall be taken where there is no influence of spoil banks, levees, or any other human induced alterations unless otherwise stated by the LDNR/CRD. Patterns for the elevation determinations shall be determined by the needs of each individual project.

Marsh surface with respect to elevation surveys is defined as when the survey rod is resting among living stems or is supported by soil containing living roots. In order to get consistent readings, it may be necessary to move stems of the vegetation where stem density is extremely high. In areas where *Spartina patens* (Saltmeadow cordgrass) are the dominant species, a minimum of forty (40) elevations will be obtained and recorded. Twenty (20) elevations will be recorded on the marsh surface and twenty (20) elevations will be recorded on the crown (top part of the tuft) of the *Spartina patens* that is adjacent to the marsh surface reading. These readings shall be recorded such that the marsh elevation and the crown readings can be separated. The average marsh elevation will be obtained by averaging the forty (40) points; however, these readings may need to be separated at a later date.

Prior to obtaining marsh elevation readings, the following information shall be recorded in a field journal: station number, date and time of the survey, staff gauge reading (if present), and presence or absence of water above the marsh surface.

Once the survey at each station is completed, the surveyor shall record the type of terrain encountered during the survey. The description should include firmness of the marsh surface and ease of movement which will facilitate how the area may be surveyed at a later date.

12.6. Deliverables

Upon completion of a project, a GPS Survey Report shall be provided to the LDNR/CRD as outlined in Section G – Deliverables of the Contractor's Guide to Minimum Standards. These deliverables have been established for the installation of deep rod secondary monuments; however, the contents shall be applied to the surveys required for the collection of water level and marsh elevations. The packet shall consist of a completed copy of the (1) "Continuous Recorder and Staff Gauge Surveying Data Sheet" (Appendix A, Form 3); (2) surveying data sheets for any benchmark or RSET station, continuous recorder elevation, or staff gauge (Appendix A, Forms 5 and 6); and/or (3) marsh elevations (Appendix B, Format 11).

13. SUBMERGED AQUATIC VEGETATION

Three techniques are commonly used by researchers to estimate submerged aquatic vegetation (SAV) cover and relative composition. In many fresh and intermediate areas, water is extremely clear and SAV abundance is high and thus SAV cover and relative abundance of SAV can be visually estimated. However in more saline areas, turbidity is extremely high and SAV abundance is low. In such areas, frequency of SAV can be estimated from grab samples that are obtained at regularly spaced intervals on transects by dragging a garden rake as an airboat idles across the pond (Chabreck and Hoffpauir 1962, Nyman and Chabreck 1996). A third technique uses a 1 m^2 aluminum throw trap, which is commonly used to sample aquatic organisms (Rozas and Odum 1987). After the trap is pushed into the sediment, the SAV is harvested (Castellanos 1997) or the water can be pumped out and SAV cover and abundance visually estimated.

Comparing SAV on a coastwide basis is problematic because of extreme variability in water clarity, salinity, and SAV abundance. There are approximately 722,000 ha of lake and pond habitat in coastal Louisiana, of which 68% is likely turbid waters (Chabreck 1971). Visual estimation is the method of choice because it is extremely quick, accurate, and reproducible. However, the technique cannot be used in turbid waters. The use of aluminum throw traps would be too time-consuming and too costly to employ on a coastwide basis. Therefore, in order to standardize methodology to compare SAV across the range of conditions encountered in coastal Louisiana, a modified rake technique will be adapted. This technique is a modification of the regularly spaced grab samples used to estimate frequency in Louisiana brackish and saline ponds as described by Chabreck and Hoffpauir (1962) as well as Nyman and Chabreck (1995). Frequency is a more readily established quantitative measure than either the counting of individuals or the measurement of cover and is often considered a measure of abundance (Mueller-Dombois and Ellenberg 1974:69-80). However, frequency confounds abundance and dispersion because abundant species can have low frequencies if they are restricted to a few dense patches. For this reason and others, the ideal area of a sample is a point (Mueller-Dombois and Ellenberg 1974). The modified method differs from the previous garden rake method in that the garden rake is dragged on the pond bottom for one-second rather than three-seconds.

To assure repeatability across all sites, airboat speed should be as uniform as possible. This requires that the airboat idle into the wind and travel at approximately one boat-length every 10 seconds (~1.7 ft/sec); during strong winds power can be increased as needed. Leaf, bud, or root presence are generally required for a plant to be considered present in terrestrial sampling, but SAV is considered present if whole or part of an identifiable plant is returned to the surface by the rake. The number of points on a given transect should never fall below 25 (Mueller-Dombois and Ellenberg 1974); therefore ponds less than 0.25 ha (roughly 0.5 acres) should be excluded from sampling. Accuracy increases with plot number to an unknown limit; therefore, as many points as reasonable will be sampled as the airboat idles across the pond on three transects that roughly divide the pond into fourths. There is likely no benefit of exceeding 100 points per pond. Transects will not be permanent so that their direction and starting point can vary among sample dates and differing wind directions.

Field Station Establishment Materials and Equipment List

Equipment/Apparatus

1. PVC poles approximately 8-10 ft in length
2. Metal tine rake with depth graduations along the shaft
3. Documentation supplies - logbook, field data sheets, sample labels, no. 2 pencils, black permanent marker
4. Differential GPS
5. Regional field guides to native aquatic plants
6. Compass
7. YSI 30 conductivity/salinity meter or equivalent

13.1. Field Station Establishment

SAV sampling will occur in or near a pond in which a continuous recorder or discrete water quality station is located.

13.2. Data Collection

Data collection often occurs during the fall months before the water temperature begins to fall and before numerous waterfowl migrate into the coastal areas of Louisiana. The LDNR/CRD may collect SAV data during the spring months but this is highly unusual.

This method requires at least three (3) field personnel: a vessel operator, a data recorder, and a sampler. The data recorder will be responsible for recording SAV species present, water temperature, specific conductance, and salinity at the beginning and ending of each transect (Appendix A, Form 21). Water depth shall be measured every 5 samples. Each station should have at least 3 transects with at least 25 rake-samples taken on each transect. Transects shall be parallel to the wind. Differential GPS coordinates are to be taken at approximately the center of the pond.

(1) While idling an airboat into the wind, one rake sample will be taken every 10 seconds. The sampler will touch the tine-side of the rake into the direction the boat is traveling and to the pond bottom for one second, remove the sample from the bottom, and identify the vegetation from the rake sample.

(2) The sampler will announce the SAV species to the data recorder who will record the species present in the appropriate sample row. To expedite sampling/recording, abbreviations for each species are provided on the data sheet. If a plant species is not known, a sample of the plant is collected and stored in a zip-lock bag. Both the data sheet and the bag are labeled with the plant number and the description such that when it is identified then the data sheet can be corrected. The plant must be placed in a cool environment to help preserve the identity of the plant.

(3) Every five (5) samples, the pond depth shall be measured.

13.3. Data Processing

The LDNR/CRD has implemented a two phase protocol for data processing. These two phases are referred to as data entry (Phase I) and data quality assurance / quality control (Phase II). These two phases are conducted by separate individuals to assure that the final product is in complete agreement with the data collected during the field sampling procedure.

Data Entry (Phase I)

Phase I is conducted by the individual responsible for the field data collection. Upon returning from the field, photocopies are produced of the original data sheet(s). The original data sheets shall be filed systematically until both phases are complete and the LDNR/CRD has accepted the final product. As part of the final deliverable product, the LDNR/CRD requires the original data sheet(s) as well as the photocopies.

Using the template Excel spreadsheet provided by the LDNR/CRD, the data collector shall save the template using the following naming convention: Station_SAV_*date*.xls, i.e. CRMS0395_SAV_August2005.xls. This ensures that the template does not get changed accidentally and provides a working copy of the file.

The data are transferred from the photocopied field data sheet(s) to the Excel spreadsheet. The person responsible for the field data collection shall transfer the data into the corresponding cells of the spreadsheet. Once the data and information have been transferred, they must check to verify that the data entry has been completed and all numbers and notes are correct.

Once the data have been transferred, a field trip report must be generated. The field trip report must include: 1) an explanation of any logistical problems encountered in the field, especially problems that may affect data quality 2) general weather conditions 3) field personnel and their respective agency, company, or organization on the trip 4) sites that were sampled 5) type of sampling that took place 6) any notable biological activity or physical activity that may have altered or characterized the site.

When the data have been entered and the field trip report has been generated, the QA/QC checklist (Appendix A, Form 11) is attached to the copied data sheet and the field trip report. This QA/QC packet is sent to another individual for verification. This individual is referred to as the QA/QC officer.

Quality Assurance / Quality Control (Phase II)

The QA/QC officer immediately dates the packet upon receipt. Then the QA/QC officer will read the report and provide grammatical corrections, suggestive clarifications, and comments as well as verifying that all the necessary information is contained in the report. The QA/QC officer then compares the data sheet(s) with the corresponding Excel file. The QA/QC officer is examining the Excel file for any erroneous or questionable data. If mistakes or questions arise, then documentation must occur on the QA/QC checklist. At times it may be beneficial to place removable notes on the photocopy data sheet. Once the packet has been review, the QA/QC

officer shall initial and date all portions of the QA/QC checklist that are in accordance with the questions provided on the QA/QC checklist. Those areas that possess errors or present questions for clarification shall be addressed by the person responsible for Phase I.

Once the data collector has corrected or answered the problems found by the QA/QC officer, the QA/QC packet is again delivered to the QA/QC officer. The QA/QC officer examines the questions and verifies that all the data and information is correct. This process will continue until the Excel file and the field trip have been accepted by the QA/QC officer. Upon acceptance of the packet, the QA/QC officer will initial and date the rest of the QA/QC checklist.

After the QA/QC packet has been finalized, the data collector or the QA/QC officer must obtain the original data sheets. If problems were found with the data sheet(s) during the QA/QC process, then the original data sheets must be corrected. This process shall be carried out by using black ball point ink pen. No one shall erase any data or information on the original data sheet. The proper procedure will be to draw a single line through the error and place the correction as close to the error as possible. The person will also place their initial and the date next to the correction.

After all the data sheets have been removed from the field, then the data should be converted from the field format to a suitable format conducive to import into the database. To accomplish this, the field technician responsible for the data collection must transfer the raw data (actual data collected from the field) to a spreadsheet designed by DNR and into the DNR database for QA/QC.

13.4. Summary Data and Graphics

Upon completion of the QA/QC process, data shall be analyzed to determine changes between sampling periods. The data analysis programs and the templates of all the summary graphics shall be provided by the LDNR/CRD.

13.5. Deliverables

Upon completion of the QA/QC process, data analysis, and the creation of the summary graphics, the original data sheets, field trip report, the QA/QC packet, the field notebooks, data analysis results and graphics shall be delivered to the LDNR/CRD. Electronic files containing the data shall be in the appropriate deliverable format (Appendix B, Format 10) once the data has completed the QA/QC process.

14. SHORELINE POSITION

Shoreline position can be monitored using a simple method that involves the use of the Global Positioning System (GPS) and mapping with Geographic Information System (GIS) software. GPS is a world-wide radio-navigation system formed from a constellation of 24 satellites and their ground stations (Ferguson 1997). One's position is determined by triangulation of the distances that a GPS unit receives from 4 or more satellites.

Field personnel traverse the shoreline of project and reference area recording real-time coordinates with a differential GPS (DGPS) unit at various points along vegetated edge of the shoreline. DGPS involves the use of two-ground-based receivers. One monitors variations in the GPS signal and communicates those variations to the other receiver. The second receiver can then correct these calculations for better accuracy and thus yield measurements to as high as sub-meter accuracy.

The recorded coordinates are used in GIS software to map project and reference area potential shoreline movement among different sampling periods. Areal coverages are calculated from different years and changes in area are used to determine if changes in shoreline position have occurred (i.e., if shoreline erosion has occurred). This method assumes that the spatial and temporal variability in the project area due to variable wind and wave orientations is negligible among sampling trips.

GPS Requirements

The following requirements are minimum standards needed to collect DGPS coordinates for the use in determining shoreline positions.

1. GPS Unit: The LDNR/CRD collects GPS data using Trimble AgGPS 122 Integrated DGPS Beacon Receiver. It is a 12-channel GPS receiver (at least 4 channels are required for accurate measurements) with an integrated MSK receiver to provide an all-in-one DGPS unit with real-time processing. It receives both the GPS satellite signals and the differential correction broadcasts from established navigation beacon reference stations to provide real-time correction information making it capable of measuring GPS coordinates to sub-meter accuracy as well as providing repeatable output of position information.
2. Software: The LDNR/CRD uses PenMap (from Condor Earth Technologies, Inc.) which provides real-time surveying, mapping, and GIS data collection. It provides the ability to create GIS themes for analysis using ESRI's ArcGIS or ArcView software. New themes can also be created and existing shapefiles can be uploaded to PenMap and taken to the field for updating.

Field Personnel Requirements

1. The skills necessary for a field team member to conduct sampling trips, collect field data, and differentially correct GPS data shall include having extended knowledge of the

applications and theories for the settings, software, and data collecting options for the particular GPS unit being used.

2. At least one week of formal training (including a field and laboratory component) is a minimum requirement for at least one member of the team.
3. The technology related to GPS data collection is rapidly advancing and to that end, annual training to refresh or update knowledge is highly recommended.
4. Prior to coming to the field, approximate locations of the two distal ends of the shoreline are located and GPS coordinates are recorded.
    a. Using ArcInfo, bring in the appropriate DOQQ.
    b. Draw a polygon or rectangle in which two of the sides are parallel and are at approximate right angles to the shoreline in question.
    c. Record the two points where the lines intersect the shoreline; they represent the starting and stopping points for the shoreline position measurement.
    d. Load these values into the GPS unit as waypoints or stations.

Data Collection

Field method: Each site presents a different situation in which field personnel must adapt different strategies to collect data. Note: The GPS reads coordinates in WGS 84 but PenMap can convert these values to other coordinate systems.

1. Proceed to the first waypoint or shoreline intersection point (referred to as shoreline navigation reference point).
2. On the GPS unit, choose polyline and select static mean
3. Walk along the shoreline (defined as edge of the live emergent vegetation by Steyer et al. 1995) from one of the shoreline navigation reference points to the other.
4. Approximately every 5 feet, take a GPS reading in Louisiana State Plane, South Zone Coordinate System, in the North American Datum of 1983 (NAD83) UTM meters. This involves pushing reset on the GPS unit, waiting approximately 10 seconds at each stopping point, and pushing accept. A best fit line is used to extrapolate the shoreline edge of the polygon and each point will be tallied in the GPS unit. In some cases, the position dilution of precision (PDOP) will be less than four (4). Therefore, it will be necessary to wait longer than 10 seconds at each stop. At least 10 stops/readings must be made for accurate results.
5. In some cases, especially areas with long straight shorelines, the interval of GPS coordinates taken may be extended at the discretion of field personnel.

Office method: Use a GIS program such as ArcInfo to plot each point and create a polygon from these points.

1. Within each polygon, the area (m^2) is determined by adding the polyline and measuring the land bisection of the original polygon. This value is compared to the polygon formed by the shoreline position data for other sampling periods.
2. Calculate the difference between the area from one sampling period to other areas from other time periods to determined the total area change over the sampling period.
3. The change is divided by the total length of the polygon to calculate average shoreline change.

4. The total shoreline change was divided by the number of days between the samples and multiplied by 365 days to get an annual shoreline change rate.
5. Shoreline change rate can also be calculated for the entire project area among all sampling years.

The LDNR/CRD does not process the data to determine the accretion / erosion rate of the shoreline. The LDNR/CRD has contracted the Spatial Analysis Branch at the USGS—National Wetlands Research Center (NWRC) to perform its data processing since it does not have the capability to accurately analyze the data.

The USGS-NWRC follows the guidelines set forth in the LDNR/CRD's Quality Management Program (April 2003 and September 1995).

15. AERIAL PHOTOGRAPHY

Color-infrared photography will be acquired at each 1 km^2 CRMS-*Wetland* site to provide a site-specific assessment of land and water coverage trends. An unsupervised classification based on a 50-class assignment, 0.950 convergence threshold, and a maximum of 10 iterations will be performed on the appropriate aerial photography for each site. The new image will be analyzed and interpreted and the original 50 classes will ultimately be combined into two classes: land and water. Unless otherwise noted as a specific preliminary condition, all vegetation such as scrub-shrub, emergent vegetation, and forested areas will fall under the land classification, while open water, nonvegetated mud flats, and aquatic beds will be characterized as water. After classification is complete, an accuracy assessment will be performed to determine a percent accuracy level of the land/water classification. Using the image processing software, no less than 100 points are randomly generated and distributed throughout the image, which is then identified, labeled, and compared to the original classification. After all points are identified and compared to the original classification, an accuracy percentage is calculated. The final image will be submitted to the NWRC photointerpreter, LDNR monitoring manager(s), as well as other members of the CWPPRA team for review to ensure proper classification. All edits and suggestions will be considered and amended where appropriate.

After accuracy has been determined, maps depicting the analysis with acreage amounts overlaid onto base photography will be created in report compatible (8.5 x 11 in.) and presentation (display size) formats. Each will follow standard cartographic procedures. When two or more land/water analyses are to be compared for change in land acreage, the GIS analyst will create a composite file that congregates the different years of data. Four categories of data will be displayed on a composite image: land and water areas that remained unchanged between the two images, as well as classes depicting the areas where land loss and land gain occurred.

The detailed protocol for color-infrared photography acquisition, interpretation, digitization, and statistics can be found in the "Quality Management Plan for Coastal Wetlands Planning, Protection, and Restoration Act Monitoring Plan" revised in June of 2000.

16. SATELLITE IMAGERY

Coastwide satellite imagery will be acquired every three years at a spatial resolution suitable for regional assessment of land and water trends. Landsat Thematic Mapper (TM) multi-spectral imagery will be used for the initial assessments, although other imagery may be incorporated as newer satellites are deployed. Imagery will be acquired during clear weather conditions after frontal passages during the fall, although some later winter imagery may be needed to minimize the presence of aquatic vegetation in fresh marshes. Landsat imagery will be acquired in FASTL-7A format, geocoded, with full terrain correction. All imagery will be radiometrically corrected to normalize digital numbers for between image comparisons over time. Landsat Imagery will be classified with the same classification methodology used to develop the Louisiana Coastal Area Study classified Landsat land and water data sets. Each image will be classified individually to identify land and water. A classification accuracy assessment, using at least 150 randomly generated and distributed points, will be conducted on each classified scene, resulting in an overall accuracy estimate for the classified image. The separate classified land and water images will be mosaiced to produce a seamless coastal classified land and water data set. The coastwide data set will be compared to the most recent land and water data set to identify changes in land and water distribution during the collection interval. Tables summarizing land and water area changes by basin and province, and spatial change data sets and maps highlighting land and water changes will be produced for LDNR and CWPPRA review and distribution.

Improvements in satellite technologies will continually be assessed over time for potential application in land and water trend analysis. Reductions in cost and improvements in accuracy may allow one high-resolution satellite image to meet the site-specific and regional assessment requirements of the CRMS-*Wetland* program.

17. REFERENCES

Andrejko, M.J., F. Fiene, and A.D. Cohen. 1983. Comparison of Ashing Techniques for Determination of Inorganic Contents of Peats. In P.M. Jerret, *editor*. *Testing of Peats and Organic Soils*. ASTM STP 820. American Society of Testing Materials, Philadelphia, PA, pp 5-20.

Avery, T.E. and H.E. Burkhart. 1994. *Forest Measurements*. 4th ed. McGraw-Hill, New York. 408 pp.

Barras, J.A., S. Beville, D. Britsch, S. Hartley, S. Hawes, J. Johnston, P. Kemp, Q. Kinler, A. Martucci, J. Porthouse, D. Reed, K. Roy, S. Sapkota, and J. Suhayda. 2003. Historical and projected coastal Louisiana land changes: 1978-2050: USGS Open File Report 03-334.

Bass, A.S., C.F. Robertson, and W.K. Rhinehart. 2003. Office of Coastal Restoration and Management Quality Management Plant: 2003. Louisiana Department of Natural Resources, Baton Rouge, LA. 98 pp.

Bohn, C.C. 2001. Guide for fabricating and installing shallow ground water observation wells. USDA Research Note RMRS-RN-9. 5 pp.

Brady, N.C. and R.R. Weil. 2002. The Nature and Property of Soils. 13th ed. Prentice Hall, New York. 960 pp.

Cahoon, D.R., J.C. Lynch, P. Hensel, R. Boumans, B.C. Perez, B. Segura, and J.W. Day, Jr. 2002a. A device for high precision measurement of wetland sediment elevation: I. Recent improvements to the sedimentation-erosion table. Journal of Sedimentary Research. 72: 730-733.

Cahoon, D.R., J.C. Lynch, and R.M. Knaus. 1996. Improved cryogenic coring device for sampling wetland soils. Journal of Sedimentary Research 66:1025-1027.

Cahoon, D.R., J.C. Lynch, B.C. Perez, B. Segura, R. Holland, C. Stelly, G. Stephenson, and P. Hensel. 2002b. A device for high precision measurement of wetland sediment elevation: II. The rod surface elevation table. Journal of Sedimentary Research. 72: 734-739.

Castellanos, D.L. 1997. *Nekton use of submerged aquatic vegetation, marsh, and shallow unvegetated bottom in a Louisiana tidal freshwater ecosystem*. M.S. Thesis, University of Louisiana-Lafayette, Lafayette, LA.

Chabreck, R.H. 1971. Ponds and lakes of the Louisiana coastal marshes and their value to fish and wildlife. Proceedings of the Annual Conference of Southeastern Association of Game Fish Community 25:206-215.

Chabreck, R.H. and C.M. Hoffpauir. 1962. The use of weirs in coastal marsh management in Louisiana. Proceedings of the Annual Conference of Southeastern Association of Game Fish Community 16:103-112.

Chabreck, R.H. and G. Linscombe. 1997. Louisiana Coastal Marsh Vegetative Type Map. Louisiana State University and Louisiana Department of Wildlife and Fisheries.

Feijtel, T.C., R.D. DeLaune, and W.H. Patrick, Jr. 1988. Seasonal pore water dynamics in marshes of the Barataria Basin, Louisiana. Soil Science Society of America Journal. 52:59-67.

Ferguson, M. 1997. *GPS Land Navigation*. Glassford Publishing, Idaho. 255 pp.

Gagliano, S.M., K.J. Meyer-Arendt, and K.M. Wicker. 1981. Land loss in the Mississippi River deltaic plain. Transactions of the Gulf Coast Association of Geological Societies 31:295-300.

Hargis, T.G. and R.R. Twilley. 1994. Improved coring device for measuring soil bulk density in a Louisiana deltaic marsh. Journal of Sedimentary Research. 3:681-683.

Kent, M. and P. Coker. 1995. *Vegetation Description and Analysis: A Practical Approach*. John Wiley & Sons, New York. 384 pp.

McGinnis II, T.E. 1997. *Factors of soil strength and shoreline movement in a Louisiana coastal marsh*. M.S. Thesis, University of Southwestern Louisiana, Lafayette, LA. 79 pp.

McKee, K.L., I.A. Mendelssohn, and M.W. Hester. 1988. Reexamination of pore water sulfide concentrations and redox potentials near the aerial roots of *Rhizophora mangle* and *Avicennia germinans*. American Journal of Botany 75:1352-1359.

Meriwether, J.R., W.J. Sheu, C. Hardaway, and J.N. Beck. 1996. Coring sampler for chemical analyses of soft sediments. Microchemical Journal 53:201-206.

Mitsch, W.J. and J.G. Gosselink. 1993. *Wetlands*. 2nd ed. John Wiley & Sons, New York. 722 pp.

Mueller-Dombois, D. and H. Ellenberg. 1974. *Aims and Methods of Vegetation Ecology*. John Wiley and Sons, New York. 547 pp.

Nutter, T. 1997. Densiometer bias? Are we measuring the forest or the trees? Wildlife Society Bulletin 25: 610-611

Nyman, J.A. and R.H. Chabreck. 1996. Some effects of 30 years of weir-management on coastal marsh aquatic vegetation and implications on waterfowl management. Gulf of Mexico Science 1:16-25.

Parent, L.E. and J. Caron. 1993. Physical Properties of Organic Soils. *In* M.R. Carter, *editor*. *Soil Sampling and Methods of Analysis*. Lewis Publishers, pp 441-485.

Phillips, L.A. 2002. *Vertical accretion and marsh elevation dynamics on the Chenier Plain, Louisiana*. M.S. Thesis, University of Louisiana-Lafayette, Lafayette, LA.

Rozas, L.P. and W.E. Odum.1987. Use of tidal freshwater marshes by fishes and macrofaunal crustaceans along a marsh strea-order gradient. Estuaries 10:36-43.

Steyer, G.D., R.C. Raynie, D.L. Steller, D. Fuller, and E. Swenson. 1995. Quality management plan for Coastal Wetlands Planning, Protection, and Restoration Act monitoring program. Open-file series no. 95-01. Baton Rouge: Louisiana Department of Natural Resources, Coastal Restoration Division. 108 pp.

Sprecher, S.W. 2000. Installing monitoring wells/piezometers in wetlands. ERDC TN-WRAP-00-02. 17 pp.

Swenson, E.M. 1982. A report on the Catfish Lake, Louisiana, backfilling study. Prepared for National Marine Fisheries Service, Southeast Region, St. Petersburg, FL. Baton Rouge: Louisiana State University, Coastal Ecology Laboratory. Coastal Ecology Publication LSU-CEL-82-25. 44 pp.

Visser, J.M. and C.E. Sasser. 1998. 1997 Coastal Vegetation Analysis. Louisiana State University: Coastal Ecology Institute. Baton Rouge, Louisiana.

APPENDIX A

FIELD DATA SHEETS AND DATA QA/QC FORMS

The field data sheets and QA/QC Checklist sheets contained in this appendix are hardcopies; however, these sheets shall be printed from the electronic file for official use. Do not photocopy these forms to use in the field. Some of these data sheets and QA/QC Checklists are still under development.

Form 1: Site characterization sheet used during the preliminary site visit.

Site Characterization Sheet (Page 1 of 2)

Site: _____ **Basin:** _____

Date and Time (CST) of Site Visit: _____ **Agency:** _____

Field Personnel: _____

Weather: _____

1. Site Location and Access:

Site Coordinates (Center Point; UTM, NAD83 Meters) Easting: [ ] Northing: [ ]

Access: Nearest City: _____ Highway Access: _____

Boat Ramp: _____

Type of Water Vessel: _____

Directions from field office: _____

Direction from boat ramp to site: _____

Site Restrictions: _____

Location of Secondary Benchmark: _____

Other:

2. Continuous Recorder Details:

Coordinates of Location (UTM, NAD 83 Meters) Easting: [ ] Northing: [ ]

Recommended Set-up (Wooden post, Mono-pole, Well): _____

Description of area [describe water body (size, depth, consistancy of bottom), distance from edge, salinity]: _____

3. Boardwalk Details:

Coordinates of Access Point (UTM, NAD83 Meters) Easting: [ ] Northing: [ ]

Direction/Bearing of Boardwalk (degrees) _____

Approximate length of Access (Additional) Boardwalk (ft)

4. Site Layout Details: (airboat access direction, vegetation transect orientation, RSET location, etc)

_____

5. Photos:

Number	Direction	Time Stamp	Number	Direction	Time Stamp
	N				
	E				
	S				
	W				

Form 1 (cont.): Site characterization sheet used during the preliminary site visit.

Site Characterization Sheet (Page 2 of 2)

Site: _____ **Basin:** _____

Date and Time (CST) of Site Visit: _____ **Agency:** _____

6. Vegetation:

Dominant Species: _____

_____

Current Marsh Type: _____

Visser/Sasser Marsh Type:

7. Marsh Characteristics:

Other Species Present: _____

_____

_____

Vegetation Characteristics (average height, grazing, burning, herbivory, wrack depostion, etc): _____

_____

_____

_____

Marsh Stability (brokenness, soil consolidation, edge shearing): _____

_____

_____

_____

Water on Marsh (depth, salinity): _____

_____

_____

Other: _____

_____

_____

8. Floating Marsh:

Recommended Set-up (Floating or Static): _____

Mat thickness (ft): _____ Distance from mat surface to firm substrate: _____

Mat characteristics: _____

9. Potential Site Problems:

_____

_____

_____

_____

Form 2: Site sketch sheet used to draw the layout of the proposed boardwalk and data collection stations along with any major physical features.

Site Sketch Sheet

CRMS Site:_____ Center Coordinates: Easting_____
Date & Time:_____ Northing_____
Personnel:_____

N

200 m

W

E

200 m

S

Site Description: (Location and orientation of access route, boardwalk, SET, continuous recorder, and vegetation transect)

Notes:

Checklist

- ☐ Compass
- ☐ Camera
- ☐ GPS
- ☐ Survey Rod
- ☐ Permanent Marker

Form 3: Example of a surveying spreadsheet used to calculate correction factors for historic monitoring hydrologic data.

Continuous Recorder and Staff Gauge Survey Data Sheet

		Continuous Recorder Gauge				
Station	Date	Top of Recorder Support Pole (4x4 Post, Cap of Pipe, etc.)	Top of Support Pole to Nail or Top of 1/4" Hole	Nail or Hole Elevation	Top of Recorder Support Pole to Top of Water Distance	Water Elevation
		(NAVD 88, Ft.)	(Ft.)	(NAVD 88, Ft.)	(Ft.)	(NAVD 88, Ft.)

How to Obtain Readings for Each Continuous Recorder Gauge Column

Top of Recorder Support Pole: Obtained by using department approved surveying methods.
Top of Support Pole to Nail or 1/4" Hole: Obtained by physically measuring the distance beween the two points.
Nail or Hole Elevation: Obtained by using the formula subtracting the two previous columns.
Top of Recorder Support Pole to Top of Water Distance: Obtained by measuring the distance between the two points.
Water Elevation: Obtained by using the formula: Top of Recorder Support Pole - Top of Recorder Support Pole to Top of Water Distance.

		Staff Gauge						
Station	Date	Existing Staff Gauge Reading (Upon Arrival)	Top of Staff Gauge Support Pole	Top of Staff Gauge Support Pole to Top of Water Distance	Water Elevation	Staff Gauge Reading (After Establishment or Adjustment)	Computed Difference (Water Elevation vs. Staff Gauge)	Correction Factor
			(NAVD 88, Ft.)	(Ft.)	(NAVD 88, Ft.)	(NAVD 88, Ft.)		

How to Obtain Readings for Each Staff Gauge Column

Existing Staff Gauge Reading: If a staff gauge is present at this location, obtain a reading before any adjustments are made.
Top of Staff Gauge Support Pole: Obtained by using department approved surveying methods.
Top of Staff Gauge Pole to Top of Water Distance: Obtained by physically measuring the distance between the two points.
Water Elevation: Obtained by subtracting the two previous readings (Top of Staff Gauge Support Pole and Top of Staff Gauge Support Pole to Top of Water Distance.
Staff Gauge Reading: Obtained by reading the staff gauge after it has been set to the datum.
Computed Difference: Obtained by subtracting the two previous readings (water elevation and Staff Gage Reading)
Correction Factor: Obtained by subtracting the Existing Staff Gauge Reading and the Staff Gauge Reading. The correction factor is used to correct all previously data collected.

Form 4: Example of a continuous recorder water level sensor data sheet.

CONTINUOUS RECORDER WATER LEVEL SENSOR DATA SHEET

Project: _____ Station: _____ Basin: _____

Date of Installation: _____ Time (CST): _____ Agency: _____

Field Personnel: _____

Continuous Recorder: _____ (Manufacturer) _____ (Model) _____ (Serial Number)

_____ (Overall length) _____ (Top to water level sensor)

☐ Wooden Post

_____ (ft) A. Nail to top of post

_____ (ft) B. Nail to bottom of continuous recorder

_____ (ft) C. Nail to water level sensor

_____ (ft) D. Nail to water line

_____ (ft) E. Nail to subsurface

_____ (ft) F. Water depth

_____ (ft) G. Penetration depth

_____ (ft) H. Total pole length

☐ Mono-Pole

_____ (ft) A. Top of 1/4" hole to top of pipe

_____ (ft) B. Top of 1/4" hole to bottom of continuous recorder

_____ (ft) C. Top of 1/4" hole to water level sensor

_____ (ft) D. Top of 1/4" hole to water line

_____ (ft) E. Top of 1/4" hole to subsurface

_____ (ft) F. Water depth

_____ (ft) G. Penetration depth

_____ (ft) H. Total pole length

_____ (ft) I. Mud line to load plate (if not resting on subsurface)

_____ (ft) J. Amount of casing removed (if damage was done during installation)

Form 5: Example of a continuous recorder Data Sheet.

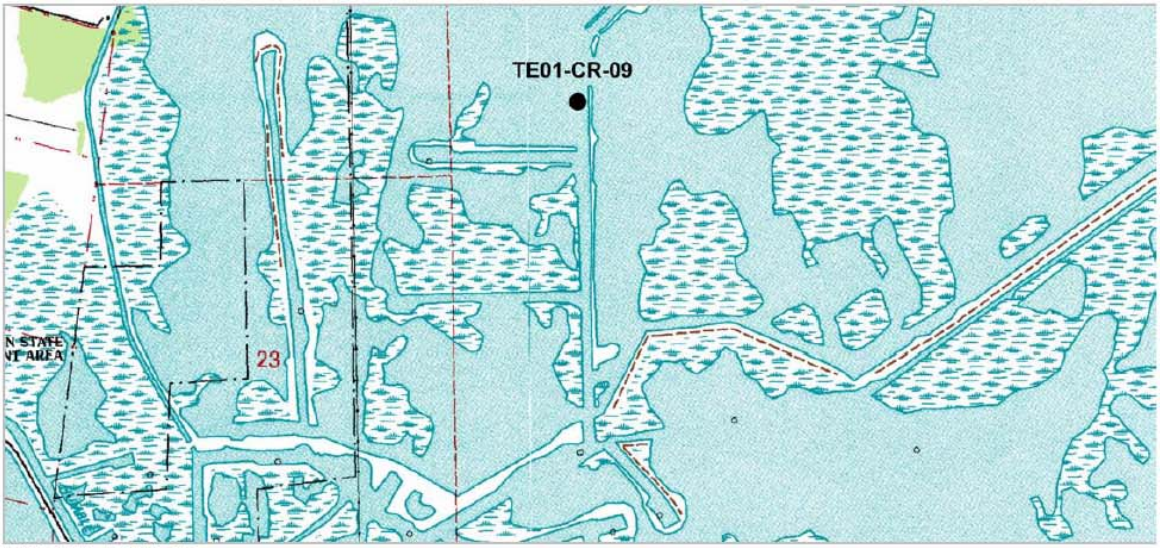

VICINITY MAP Scale: 1" = 2000' Reproduced from USC&GS "MONTEGUT" Quadrangle

Station Name: "TE01-CR-09"

Location: From the boat launch along HWY 55 in Montegut, Louisiana, at the point Barre Road, head north in Bayou Terrebonne to the Humble Canal. Head southeast in Humble Canal to the Oilfield Canal. Turn left out of Humble Canal into the Oilfield Canal heading north. At the end of the Oilfield Canal is the Montegut Levee System with a set of boat rollers to allow for boats with engines smaller than 25 horsepower to cross. After crossing the levee follow the levee system heading easterly for approximately 4500 feet. Turn into the location canal heading north. The gage is located approximately 4000 feet from the levee system in the location canal.

Gage Description: The gage is a continuous recorder type gage attached to a 4 x 4 treated wood post with reference nail driven horizontally into the wood post.

Date of Survey: November 26, 2003

CONTINUOUS RECORDER GAGE

Adjusted NAD 83 Geodetic Position
Lat. 29°26' 54.097" N
Long. 90°32' 22.825" W

Adjusted NAD 83 Datum LSZ (1702) Feet
N= 345,762.50
E= 3,533,439.33

UTM NAD 83 Datum Meters
N= 3,260,181.697
E= 738,632.323

Elevation at Top of 4x4 Post
Elevation = 5.83 feet (NAVD 88)

Elevation at Top Shank of Nail
Elevation = 4.12 feet (NAVD 88)

Position determined by using Real-Time Kinematic (RTK) survey from Secondary GPS Monument "FLOOD"
Position established by T. Baker Smith & Son, Inc. for the Louisiana Department of Natural Resources, Coastal Restoration Division.

Form 6: Example of a staff gauge data sheet.

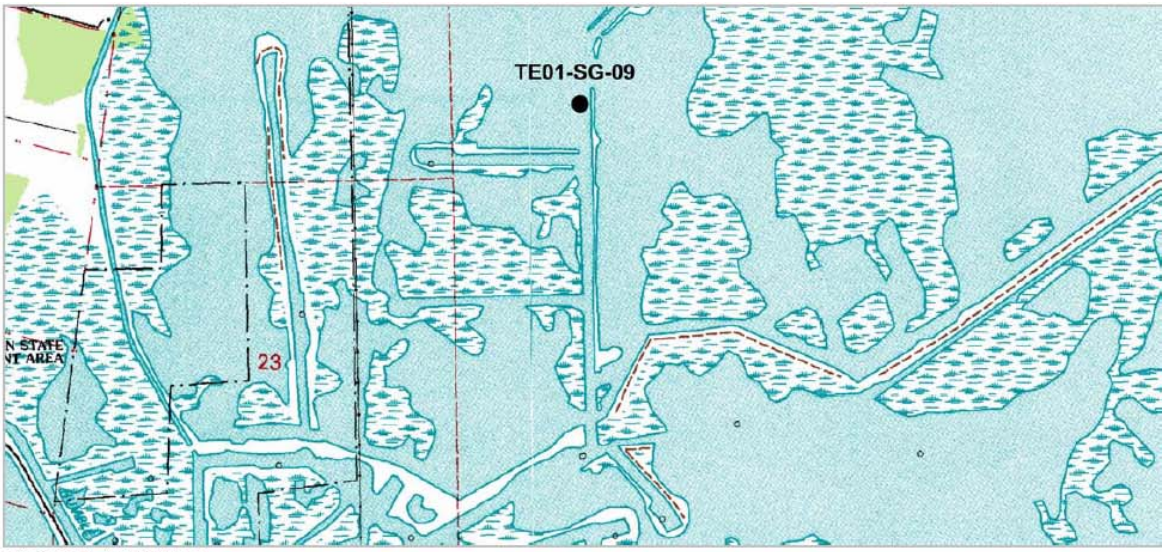

VICINITY MAP Scale: 1" = 2000' Reproduced from USC&GS "MONTEGUT" Quadrangle

Station Name: "TE01-SG-09"

Location: From the boat launch along HWY 55 in Montegut, Louisiana, at the Pointe Barre Road, head north in Bayou Terrebonne to the Humble Canal. Head southeast in Humble Canal to the Oilfield Canal. Turn left out of Humble Canal into the Oilfield Canal heading north. At the end of the Oilfield Canal is the Montegut Levee system with a set of boat rollers to allow for boats with engines smaller than 25 horsepower to cross. After crossing the levee follow the levee system heading easterly for approximately 4500 feet. Turn into the location canal heading north. The gage is located approximately 4000 feet from the levee system in the location canal.

Gage Description: The gage is a ceramic plated staff gage mounted to a 2 x 4 attached to a 2.5" galvanized iron pipe.

Date of Survey: November 26, 2003

STAFF GAGE

Adjusted NAD 83 Geodetic Position
Lat. 29°26' 54.097" N
Long. 90°32' 22.825" W

Adjusted NAD 83 Datum LSZ (1702) Feet
N= 345,762.50
E= 3,533,439.33

UTM NAD 83 Datum Meters
N= 3,260,181.697
E= 738,632.323

Elevation at Top of Galvanized Cap
Elevation = 5.91 feet (NAVD 88)

Position determined by using Real-Time Kinematic (RTK) survey from Secondary GPS Monument "FLOOD"
Position established by T. Baker Smith & Son, Inc. for the Louisiana Department of Natural Resources, Coastal Restoration Division

Form 7: Example of a continuous recorder calibration data sheet.

Continuous Recorder Calibration Sheet

Project & Name | Station | Basin / Location | Date & CSTime

Constant Recorder | Serial Number | Dirty Battery Volts | Sonde Date &Time

Calibration Instrument | Serial Number | Collected By | Deployed Date &Time

Download Filename | No. of samples | Marsh Elevation (NAVD) | Agency

☐ Log Successful

Dirty Reading	Temp (°C)	SpCond (µS/cm)	Salinity (ppt)	Depth (ft)	Depth Out of Water (ft)	SpCond Difference
Constant Recorder						
Calibration Instrument				% Difference		

Clean Reading	Temp (°C)	SpCond (µS/cm)	Salinity (ppt)	Depth (ft)	Depth Out of Water (ft)	SpCond Difference
Constant Recorder						
Calibration Instrument				% Difference		

Calibration Required? Y☐ N☐	Temp (°C)	SpCond (µS/cm)	Salinity (ppt)	Depth (ft)	Depth Out of Water (ft)	SpCond Difference
Constant Recorder						
Calibration Instrument				% Difference		

Standard (µS/cm) ☐ Calibration Accepted

Comments…

Staff Gauge (ft)

Sensor Elevation (NAVD)

Water Level on Rod (ft)

Water Level (NAVD)

Staff Gauge (NAVD)

Staff Gauge - Water Level

Water Level Difference

% Difference

Water Level

Mark to Sensor Distance (ft)

Mark Elevation (NAVD) (ft)

Deployment

Station | Location | Date & CSTime (*MM-DD-YY HH:MM*)

Constant Recorder | Serial Number | Battery Volts | ☐ Battery Changed ☐ Desiccant Changed

Deploy Filename | Duration days | Interval minutes

Notes .....

Form 8: Example of a QA/QC Hydrologic data checklist.

HYDROLOGIC QA/QC CHECKLIST

Project / Site Number:_____ Date discrete data collected:_____ QA officer:_____

Data Collector:_____ Time period for continuous data:_____ Date approved:_____

		QA Officer's Initials and Date
1	Was a field trip report generated ? **Y / N** COMMENTS:	
2	Were all data entered in datasheets correctly (i.e., data entered in correct columns, all data in correct units)? **Y / N** COMMENTS:	
3	Were discrete data entered correctly into Excel? Were any data missing? **Y / N** COMMENTS:	
4	Were continuous recorder calibration sheets entered correctly into Excel? **Y / N** COMMENTS:	
5	Were continuous data entered correctly into Excel (e.g., time, date, hydrographic data)? **Y / N** COMMENTS:	
6	Were specific conductance data shifted for biofouling? If not, list station # and recorder id #. **Y / N** COMMENTS:	
7	Were water level data shifted for biofouling? If not, list station # and recorder id #. **Y / N** COMMENTS:	
8	Were all water level data converted to a known elevational datum (outside of Oracle)? **Y / N** COMMENTS:	
9	Were data graphed? **Y / N** COMMENTS:	
10	Was there a normal transition between the last datum record and the present datum record? **Y / N** COMMENTS:	
11	Were different recorders deployed than retrieved? If so, was the Excel Recorder Deployment file updated? **Y / N** COMMENTS:	
12	Were discrete data entered correctly into SONRIS? Were any data missing? **Y / N** COMMENTS:	
13	Were continuous data entered correctly into SONRIS? Were any data missing? **Y / N** COMMENTS:	
	Final QA Officer's Initials and Date	

Form 9: Example of a discrete hydrographic data sheet.

Discrete Hydrographic / Soil Porewater Data Sheet

Date _____ Project _____ Sheet ____ of ____

Instrument _____ Serial Number _____ Calibration Solution _____

Personnel _____ Agency/Company _____

					Surface Water			Soil Porewater			
Station	CST Time (24 hr)	Staff Gauge (ft)	Depth (ft)		Temp (C)	Sp. Cond. (µS/cm)	Salinity (ppt)	Temp (C)	Sp. Cond. (µS/cm)	Salinity (ppt)	NOTES
				Bottom / 30 cm							
				Surface / 10 cm							
				Bottom / 30 cm							
				Surface / 10 cm							
				Bottom / 30 cm							
				Surface / 10 cm							
				Bottom / 30 cm							
				Surface / 10 cm							
				Bottom / 30 cm							
				Surface / 10 cm							
				Bottom / 30 cm							
				Surface / 10 cm							
				Bottom / 30 cm							
				Surface / 10 cm							
				Bottom / 30 cm							
				Surface / 10 cm							
				Bottom / 30 cm							
				Surface / 10 cm							
				Bottom / 30 cm							
				Surface / 10 cm							
				Bottom / 30 cm							
				Surface / 10 cm							
				Bottom / 30 cm							
				Surface / 10 cm							
				Bottom / 30 cm							
				Surface / 10 cm							

Form 10: Example of a monthly hand-held salinity meter calibration sheet.

Monthly Hand-held Salinity Meter Calibration Data Sheet

Date	Manufacturer / Model	Serial Number	Instrument Appearance	Probe Appearance	Cable Appearance	Calibration Thermometer Temperature	Instrument Temperature	Temperature Difference	Battery level	Initials
			Clean or Dirty*	Clean or Dirty*	Clean / Dirty / Cuts#	°C	°C	°C	Ok or Low	

* If the instrument is dirty, it should be indicated and then it should be cleaned to prevent any damages.
\# If cuts are found on the cable, then the instrument needs to be sent in for repairs unless the cuts do not penetrate the exterior coating.

Form 11: Example of a generic QA/QC checklist.

QA/QC CHECKLIST

DATA TYPE: ___Accretion ___Forest ___SAV
___Herb. (Natural) Vegetation ___Herb. (Planted) Vegetation

PROJECT:_____ Data Collection Date(s):_____
SITE / STATION(S):_____ Date Received:_____
_____ Date QA/QC Completed:_____

Data Collection Personnel:_____
Data Entry Personnel:_____

						QA/QC Initials	DNR QA/QC
1	Was a field trip report generated? YES / NO						
2	Did the field trip report have the required information, the correct information, and the proper format?						
			YES (DATE)	NO (DATE)	Comments		
	A	Project					
	B	Basin					
	C	Purpose					
	D	Field Personnel					
	E	Date(s) of Trip					
	F	Weather Conditions					
	G	Logistical Information					
	H	Biological Information					
	I	Format					
3	Were the data sheets filled to completion? YES / NO If no, then add comments or indicate on the copied data sheets.						
4	Were the data entered into the Excel spreadsheet correctly? YES / NO Applicable YES / NO If no, then add comments or indicate on the copied data sheets.						
5	Were the data entered into SONRIS correctly? YES / NO Applicable YES / NO If no, then add comments or indicate on the copied data sheets.						

Form 12: Example of a floating marsh mat recorder calibration data sheet.

Floating Marsh Mat Recorder Calibration Sheet

Project & Name | Station | Basin / Location | Date & CSTime

Constant Recorder | Serial Number | Dirty Battery Volts | Sonde Date &Time

Calibration Instrument | Serial Number | Collected By | Deployed Date &Time

Download Filename | No. of Samples | Agency

☐ Log Successful

Dirty Reading	Temp (C)	SpCond (uS/cm)	Salinity (ppt)	Depth (ft)	Depth Out of Water	SpCond Difference
Constant Recorder						
Calibration Instrument						% Difference

Clean Reading	Temp (C)	SpCond (uS/cm)	Salinity (ppt)	Depth (ft)	Depth Out of Water	SpCond Difference
Constant Recorder						
Calibration Instrument						% Difference

Staff Gauge (ft)

Staff Gauge (NAVD)

Marsh Elevation (NAVD)

Water Level Difference

% Difference

Water Level

Mat to Sensor Distance (ft)

SHIFT

☐ Calibration Required ☐ Calibration Accepted Comments .....

Standard (uS/cm) ◯ Dessicant changed

Deployment

Station | Location | Date & CSTime (*MM-DD-YY HH:MM*)

Constant Recorder | Serial Number | Battery Volts ☐ Battery Changed

Deploy Filename | Duration days | Interval minutes

Notes .....

Form 13: Example of a static marsh mat recorder calibration sheet.

Static Marsh Mat Recorder Calibration Sheet

Project Name	Station	Basin / Location	Date & CSTime

Constant Recorder	Serial Number	Dirty Battery Volts	Sonde Date & Time

Field Personnel	Agency / Company	Deployed Date & Time

Dirty Readings / Measurements	Mark Elevation (NAVD88, Feet)	Measured Distance (Feet)	Marsh Surface Elevation (NAVD88, Feet)	Marsh Surface Elev. Difference.
Constant Recorder				
Manual Measurements				% Difference

Download

File Name						
Start Date & CSTime		Complete		Yes		No
End Date & CSTime		Successful		Yes		No

Pulley Precision Check

Known distance of pulley rotation	Instrument Reading	Difference	Acceptable
	Before		Yes
	After	% Difference	No

Clean Readings / Measurements	Mark Elevation (NAVD88, Feet)	Measured Distance (Feet)	Marsh Surface Elevation (NAVD88, Feet)	Marsh Surface Elev. Difference.
Constant Recorder				
Manual Measurements				% Difference

Calibration Required		Yes		No	Calibration Accepted		Yes		No

Deployment

Constant Recorder	Serial Number	Battery Volts	Battery Changed			
				Yes		No

Date & CSTime	Interval
	minutes

Notes

Staff Gauge (NAVD88, Feet)

Form 14: Example of a surface elevation table data sheet

Surface Elevation Table (SET) Data Sheet

Distance from top of rod to top of table (mm): _____

Project: _____ Basin: _____

Station: _____ Group: _____

Sample Date: _____ Time: _____ Establishment Date: _____ Time: _____

SET ID: _____ Organization: _____

Measured by: _____ Field personnel: _____

Pin	Direction (Degrees)	(Collar #)	Pin Height (mm)	Comments (description that pertain to problems with reading)
1				
2				
3				
4				
5				
6				
7				
8				
9				
1				
2				
3				
4				
5				
6				
7				
8				
9				
1				
2				
3				
4				
5				
6				
7				
8				
9				
1				
2				
3				
4				
5				
6				
7				
8				
9				

Site Conditions (weather, water level related to marsh surface, dominant plant species, etc.):

Form 15: Example of RSET QA/QC Checklist

RSET QA/QC CHECKLIST

Project / Site Number:_____ Date RSET data collected:_____ QA officer:_____

Data Collector:_____ Date of last RSET data collection:_____ Date approved:_____

DNR/USGS QA Officer:_____ Date: _____

		QA Officer's Initials and Date
1	Was a field trip report generated ? **Y / N** COMMENTS:	
2	Were all data entered in datasheets correctly (i.e., data entered in correct columns, all data in correct units)? **Y / N** COMMENTS:	
3	Were data entered correctly into SONRIS? **Y / N** COMMENTS:	
4	Was the same RSET instrument used as was used for previous data collection? Same RSET reader? **Y / N** COMMENTS:	
5	Were the correct number of observations recorded in each direction? **Y / N** COMMENTS:	
6	Were the same 4 collar and bearing directions used as previous? If not, Why? **Y / N** COMMENTS:	
7	Where elevation change differences calculated and comments compared to previous? **Y / N** COMMENTS:	
8	Were the elevation change differences reasonable (i.e. did the comments explain observations outside of the 95% CI?) **Y / N** COMMENTS:	
9	Were potentially unreasonable differences highlighted and discussed? **Y / N** COMMENTS:	
10	Were the means ± standard errors graphed for directions? Were any directions significantly different from the others? **Y / N** COMMENTS:	
11	Was there any apparent disturbance to the site or any RSET directions? If so, was it recorded in Site History file? **Y / N** COMMENTS:	
12	Are the calculations, comparisons, and explanations attached? **Y / N** COMMENTS:	
	Final QA Officer's Initials and Date	

Form 16: Example of an accretion measurement data sheet

Accretion Measurement Data Sheet

Feldspar Cryogenic Coring Techniques

Basin: _____

Station: _____ Group: _____ Project/Site: _____

Sample Date: _____ Time: _____ Establishment Date: _____ Time: _____

Organization: _____

Measured by: _____ Other Personnel: _____

Cryo-Core Coords (X : Y)	Accretion Measurements (mm)				Core Conditions (Excellent- E, Good- G, Fair- F, Poor- P)
	1	2	3	4	

Notes:

Form 17: Example of a natural vegetation sampling data sheet

Natural Vegetation Sampling Data Sheet

Modified Braun-Blanquet Technique

Sample Type: Stratified_____ Random_____ Transect_____

Project: _____ Station: _____ Group: _____

Personnel: _____ Plot Size (m^2): _____ Date: _____

Station Coordinates: _____ Organization: _____

Plant Community Type: _____Freshwater _____Intermediate _____Brackish _____Saline _____Cypress-Tupelo Swamp
_____Other (describe) _____

Percent Cover: Total Cover _____% Bare Ground_____% Tree* _____% Shrub _____% Herbaceous _____% Carpet _____%

(Do not estimate % Tree cover when completing data sheet in swamp sites.)*

Average Height: Dominant Height _____(cm) Tree _____(cm) Shrub _____(cm) Herbaceous _____(cm) Carpet _____(cm)

Species List

Scientific Name	Common Name	% Cover	B-B Rank	IN / OUT	Additional Species Description

B-B Rank: (5) 76-100%, (4) 51-75%, (3) 26-50%, (2) 6-25%, (1) 1-5%, (+) <1%, (r) Solitary

Comments:

Form 18: Example of a forest community data sheet

Forest Community Data Sheet

Sample Type: Stratified_____ Random_____ Transect_____ Densiometer Reading _____ Canopy Cover (%) _____

Project: _____ Station: _____ Group: _____

Personnel: _____ Plot Size (m^2): _____ Date: _____

Station Coordinates: _____ Organization: _____

Plant Community Type: _____Cypress-Tupelo Swamp _____Bottomland Hardwood Forest
_____Other (describe) _____

Species List with Diameter at Breast Height (DBH)

Tree Number	Scientific Name	Common Name	Diameter (cm)	Shifted DBH (Y/N)	Distance aboveground (cm)	Additional Species Description

Notes/Comments:

Form 19: Example of soil cores field sheet

Soil Cores Data Sheet

Project: _____ Basin: _____

Station: _____ Group: _____

Date: _____ Organization: _____

Personnel: _____

	Core tube top to soil surface (cm)		Core Extraction (sampling)		Core Extrusion (slicing)	
Core ID	INSIDE	OUTSIDE	Tube Length (cm)	% Compaction[1]	Depth Extruded (cm)	% Compaction[2]

Field Conditions:

Was Site Flooded? _____ Flood Depth: _____

Was it possible to get a consolidated core? _____

If No, How many attempts were made? _____

Were the cores sliced? _____

Core Tube (circle one): PVC Acryllic Aluminum/Steel

Core Method (circle one): Meriwether corer 16-cm

Was external water used to fill core tube head space? _____

If yes, where was the water collected? _____

Dominant Species: _____

Additional Comments: (Describe sediments cored including color, texture, problems, etc..)

Depth Inserted = Tube Length- OUTSIDE

Depth Extracted=Tube Length-INSIDE

%Compaction[1] = ((INSIDE-OUTSIDE)/(Depth Inserted))*100

%Compaction[2] = ((Depth Extracted - Depth Extruded)/Depth Extracted)*100

Form 20: Example of soil cores QA/QC checklist

SEDIMENT CORES QA/QC CHECKLIST

Project / Site Number:_____ Date cores collected:_____ QA officer:_____

Data Collector:_____ Date approved:_____

DNR/USGS QA Officer:_____ Date: _____

		QA Officer's Initials and Date
1	Was a field trip report generated ? **Y / N** COMMENTS:	
2	Was the field sheet checked for completeness? **Y / N** COMMENTS:	
3	Were the cores sliced in the field? If not, describe problems. **Y / N** COMMENTS:	
4	Was there more than 10% compaction? If so, describe conditions and attempts made. **Y / N** COMMENTS:	
5	Were core samples transported to the contracted soils lab with 48 hours? **Y / N** COMMENTS:	
6	Were the data received from the contracted soils lab? **Y / N** COMMENTS:	
7	Were the data QA/QC'd for completeness and logical values? **Y / N** COMMENTS:	
8	Were data graphed? Was there more than 5% variation between samples for each depth? **Y / N** COMMENTS:	
9	Were data uploaded to the ftp site? **Y / N** COMMENTS:	
10	Were all spreadsheets (received from the lab and created by the contractor) delivered to LDNR? **Y / N** COMMENTS:	
	Final QA Officer's Initials and Date	

Form 21: Example of a submerged aquatic vegetation transect data sheet.

Submerged Aquatic Vegetation (SAV) Transect Data Sheet

Modified Rake Technique

Project:_____ Basin:_____ Sheet: ____of____

Station:_____ Emergent Vegetation Community:_____

No. of Samples:_____ Personnel:_____ Agency:_____

Species Abbreviations

A = Alga (A1=alga1, etc)
Ca = Cabomba caroliniana
Ch = Chara (Ch1 = sp.1, etc.)
Ce = Ceratophyllum demersum
E = Eleocharis (E1 = sp.1, etc.)
M = Myriophyllum spicatum
Na = Najas guadalupensis
Ne = Nelumbo lutea
O = Ottelia alismatoides
P = Potamogeton (P1= sp.1, etc)
R = Ruppia maritima
V = Vallisneria americana
Z = Zannichellia palustris
____= _____
____= _____

Transect No.	Sample No.	Species Present	Depth (cm)	Water Temp (C)	Sp.Cond. (µS/cm)	Salinty (ppt)	Transect No.	Sample No.	Species Present	Depth (cm)	Water Temp(C)	Sp.Cond. (µS/cm)	Salinty (ppt)
	1							21					
	2							22					
	3							23					
	4							24					
	5							25					
	6							26					
	7							27					
	8							28					
	9							29					
	10							30					
	11							31					
	12							32					
	13							33					
	14							34					
	15							35					
	16							36					
	17							37					
	18							38					
	19							39					
	20							40					

Notes:

APPENDIX B

DATA DELIVERABLE FORMATS

The data deliverable formats contained in this appendix provides the column headings and order in which the LDNR/CRD requires the final deliverable product. Data deliverable formats are subject to change based on LDNR/CRD/RTS discretion. The formats presented in this appendix are as of August 4, 2005.

Format 1: Station coordinate data format.

Project :		
Station ID	**Easting_UTM,NAD83 (m)**	**Northing_UTM,NAD83 (m)**
TE28-01	694005.263	3252389.221
TE28-02	698197.4191	3254848.185
TE28-03	697508.5618	3250655.274
TE28-04R	692961.597	3251471.078
TE28-05R	700798.9908	3255805.055
TE28-06R	702509.505	3254373.107
TE28-07R	697262.0566	3255936.381

Format 2: Monitoring station data collection information and frequency data format.

STATION_ID	FEDERAL_ID	STATE_ID	PROJECT TYPE	STATUS	DATA TYPE	MEASURE	FREQUENCY	METHOD
TE28-01	PTE-26b	TE-28	CWPPRA	Active	Hydrography	Water Level	Hourly	DGPS
TE28-01	PTE-26b	TE-28	CWPPRA	Active	Hydrography	Specific Conductance	Hourly	DGPS
TE28-01	PTE-26b	TE-28	CWPPRA	Active	Hydrography	Salinity	Hourly	DGPS
TE28-01	PTE-26b	TE-28	CWPPRA	Active	Hydrography	Water Temperature	Hourly	DGPS
TE28-01	PTE-26b	TE-28	CWPPRA	Active	Hydrography	Water Level	Monthly	DGPS
TE28-01	PTE-26b	TE-28	CWPPRA	Active	Hydrography	Water Depth	Monthly	DGPS
TE28-01	PTE-26b	TE-28	CWPPRA	Active	Hydrography	Specific Conductance	Monthly	DGPS
TE28-01	PTE-26b	TE-28	CWPPRA	Active	Hydrography	Salinity	Monthly	DGPS
TE28-01	PTE-26b	TE-28	CWPPRA	Active	Hydrography	Water Temperature	Monthly	DGPS
TE28-08	PTE-26b	TE-28	CWPPRA	Inactive	Sediment Elevation	Feldspar Marker	Variable	DGPS
TE28-09	PTE-26b	TE-28	CWPPRA	Inactive	Sediment Elevation	Feldspar Marker	Variable	DGPS
TE28-10	PTE-26b	TE-28	CWPPRA	Inactive	Sediment Elevation	Feldspar Marker	Variable	DGPS
TE28-100	PTE-26b	TE-28	CWPPRA	Active	Vegetation	Emergent Vegetation	Variable	DGPS
TE28-101	PTE-26b	TE-28	CWPPRA	Active	Vegetation	Emergent Vegetation	Variable	DGPS
TE28-165R	PTE-26b	TE-28	CWPPRA	Inactive	Hydrography	Water Depth	Monthly	DGPS
TE28-165R	PTE-26b	TE-28	CWPPRA	Inactive	Hydrography	Specific Conductance	Monthly	DGPS
TE28-165R	PTE-26b	TE-28	CWPPRA	Inactive	Hydrography	Salinity	Monthly	DGPS
TE28-165R	PTE-26b	TE-28	CWPPRA	Inactive	Hydrography	Water Temperature	Monthly	DGPS
TE28-165R	PTE-26b	TE-28	CWPPRA	Inactive	Vegetation	Submerged Aquatic Veg	Variable	DGPS

Format 3: Continuous recorder data format for any instrument used to collect data with variables specified in the header (1 of 2).

Station ID	Date (mm/dd/yyyy)	Time (hh:mm:ss)	Raw Water Temperature (°C)	Adjusted Water Temperature (°C)	Raw Specific Conductance (uS/cm)	Adjusted Specific Conductance (uS/cm)	Raw Salinity (ppt)	Adjusted Salinity (ppt)	Raw Water Level (ft)	Adjusted Water Level (ft)	Raw Water Elevation to Marsh (ft)	Adjusted Water Elevation to Marsh (ft)	Raw Water Elevation to Datum (ft)	Adjusted Water Elevation to Datum (ft)	Raw Battery (V)	Adjusted Battery (V)	Raw Marsh Mat Elevation (ft)	Adjusted Marsh Mat Elevation to Datum (ft)
BA01-01	01/01/2010	00:00:08	7.45	7.45	1539.7	1422.4	0.78	0.75	1.72	1.72		-1.45		-0.72	12	12		
BA01-01	01/01/2010	01:00:08	7.32	7.32	1540.7	1423.2	0.78	0.75	1.71	1.71		-1.46		-0.73	12	12		
BA01-01	01/01/2010	02:00:08	7.26	7.26	1539.8	1422.1	0.78	0.75	1.73	1.73		-1.45		-0.72	12	12		
BA01-01	01/01/2010	03:00:08	7.14	7.14	1538.2	1420.3	0.78	0.75	1.81	1.81		-1.36		-0.63	12	12		
BA01-01	01/01/2010	04:00:08	6.96	6.96	1543.5	1425.41	0.78	0.75	1.73	1.73		-1.44		-0.71	12	12		
BA01-01	01/01/2010	05:00:08	6.94	6.94	1543.2	1424.91	0.78	0.75	1.84	1.84		-1.33		-0.6	12	12		
BA01-01	01/01/2010	06:00:08	6.67	6.67	1543.7	1425.21	0.78	0.75	1.88	1.88		-1.29		-0.56	11.9	11.9		
BA01-01	01/01/2010	07:00:08	6.46	6.46	1547.7	1429.01	0.78	0.76	1.76	1.76		-1.41		-0.68	11.8	11.8		
BA01-01	01/01/2010	08:00:08	6.53	6.53	1561.4	1442.51	0.79	0.76	1.75	1.75		-1.42		-0.69	12	12		

Format 3 (cont.): Continuous recorder data format for any instrument used to collect data with variables specified in the header (2 of 2).

Raw Wind Speed (mph)	Adjusted Wind Speed (mph)	Raw Wind Direction (degrees)	Adjusted Wind Direction (degrees)	Raw Velocity (ft/sec)	Adjusted Velocity (ft/sec)	Raw Precipitation (tips/hour)	Adjusted Precipitation (inches)	Raw Air Pressure (mm of Hg)	Adjusted Air Pressure (mm of Hg)	Raw Total Chlorophyll (micrograms/L)	Adjusted Total Chlorophyll (micrograms/L)	Raw Dissolved Oxygen (milligrams/L)	Adjusted Dissolved Oxygen (milligrams/L)	Raw pH (pH units)	Adjusted pH (pH units)	Raw Turbidity (NTU)	Adjusted Turbidity (NTU)	Raw Discharge (cubic ft/sec)	Adjusted Discharge (cubic ft/sec)	Organization Name
																				LA DEPT OF NAT RES (CRDB)
																				LA DEPT OF NAT RES (CRDB)
																				LA DEPT OF NAT RES (CRDB)
																				LA DEPT OF NAT RES (CRDB)
																				LA DEPT OF NAT RES (CRDB)
																				LA DEPT OF NAT RES (CRDB)
																				LA DEPT OF NAT RES (CRDB)
																				LA DEPT OF NAT RES (CRDB)
																				LA DEPT OF NAT RES (CRDB)

Format 4: Discrete water quality data format (1 of 2).

Station ID	Date (mm/dd/yyyy)	Time (hh:mm)	Staff Gauge (ft)	Depth (ft)	Bottom Water Temperature (°C)	Surface Water Temperature (°C)	Bottom Specific Conductance (uS/cm)	Surface Specific Conductance (uS/cm)	Bottom Salinity (ppt)	Surface Salinity (ppt)	Bottom Dissolved Oxygen (milligrams/L)	Surface Dissolved Oxygen (milligrams/L)
BS03A-06R	01/23/3001	14:21		2	10.7	11	3520	3631	1.9	1.9		
BS03A-06R	02/22/3001	11:33		1	22.8	23.5	3704	3705	1.9	2		
BS03A-06R	03/22/3001	11:15		2.5	15.6	17.6	395	392	0.2	0.2		
BS03A-06R	04/27/3001	07:54		1.5	21.5	21.7	1950	1929	1	1		
BS03A-06R	05/29/3001	09:19		0.5	31	31	1972	1972	1	1		
BS03A-06R	06/26/3001	11:17		2	26.8	29.6	1245	1205	0.6	0.6		
BS03A-06R	07/27/3001	08:54		2.5	26.5	28.2	1020	835	0.6	0.4		

Format 4 (cont.): Discrete water quality data format (2 of 2).

Bottom pH (pH units)	Surface pH (pH units)	Bottom Velocity (ft/sec)	Surface Velocity (ft/sec)	Secchi (ft)	Fecal Coliform (MPN/100ml)	Soil Porewater Temperature at 30 cm (°C)	Soil Porewater Temperature at 10 cm (°C)	Soil Porewater Specific Conductance at 30 cm (uS/cm)	Soil Porewater Specific Conductance at 10 cm (uS/cm)	Soil Porewater Salinity at 30cm (ppt)	Soil Porewater Salinity at 10cm (ppt)	Organization Name
												Coastal Test Inc
												Coastal Test Inc
												Coastal Test Inc
												Coastal Test Inc
												Coastal Test Inc
												Coastal Test Inc
												Coastal Test Inc

Format 5: Surface elevation table (SET) data format.

Station ID	Group	Sample Date (mm/dd/yyyy)	Sample Time (hh:mm)	Establishment Date (mm/dd/yyyy)	Establishment Time (hh:mm)	Direction (Collar Number)	Direction (Compass Degrees)	Pin Number	Pin Height (mm)	SET ID	Organization	Personnel	Comments	Site Conditions
BS03A-11	1	08/07/2000	14:02	08/07/2000	14:02	1	0	1	140	CRD-THIB	LA DEPT OF NAT RES (CRDNO)	G. Snedden;M. Sealy		
BS03A-11	1	08/07/2000	14:02	08/07/2000	14:02	1	0	2	155	CRD-THIB	LA DEPT OF NAT RES (CRDNO)	G. Snedden;M. Sealy		
BS03A-11	1	08/07/2000	14:02	08/07/2000	14:02	1	0	3	174	CRD-THIB	LA DEPT OF NAT RES (CRDNO)	G. Snedden;M. Sealy		
BS03A-11	1	08/07/2000	14:02	08/07/2000	14:02	1	0	4	121	CRD-THIB	LA DEPT OF NAT RES (CRDNO)	G. Snedden;M. Sealy		
BS03A-11	1	08/07/2000	14:02	08/07/2000	14:02	1	0	5	156	CRD-THIB	LA DEPT OF NAT RES (CRDNO)	G. Snedden;M. Sealy		
BS03A-11	1	08/07/2000	14:02	08/07/2000	14:02	1	0	6	195	CRD-THIB	LA DEPT OF NAT RES (CRDNO)	G. Snedden;M. Sealy		
BS03A-11	1	08/07/2000	14:02	08/07/2000	14:02	1	0	7	145	CRD-THIB	LA DEPT OF NAT RES (CRDNO)	G. Snedden;M. Sealy		
BS03A-11	1	08/07/2000	14:02	08/07/2000	14:02	1	0	8	156	CRD-THIB	LA DEPT OF NAT RES (CRDNO)	G. Snedden;M. Sealy		
BS03A-11	1	08/07/2000	14:02	08/07/2000	14:02	1	0	9	163	CRD-THIB	LA DEPT OF NAT RES (CRDNO)	G. Snedden;M. Sealy		
BS03A-11	1	08/07/2000	14:02	08/07/2000	14:02	2	90	1	224	CRD-THIB	LA DEPT OF NAT RES (CRDNO)	G. Snedden;M. Sealy		
BS03A-11	1	08/07/2000	14:02	08/07/2000	14:02	2	90	2	223	CRD-THIB	LA DEPT OF NAT RES (CRDNO)	G. Snedden;M. Sealy		
BS03A-11	1	08/07/2000	14:02	08/07/2000	14:02	2	90	3	275	CRD-THIB	LA DEPT OF NAT RES (CRDNO)	G. Snedden;M. Sealy		
BS03A-11	1	08/07/2000	14:02	08/07/2000	14:02	2	90	4	253	CRD-THIB	LA DEPT OF NAT RES (CRDNO)	G. Snedden;M. Sealy		
BS03A-11	1	08/07/2000	14:02	08/07/2000	14:02	2	90	5	247	CRD-THIB	LA DEPT OF NAT RES (CRDNO)	G. Snedden;M. Sealy		
BS03A-11	1	08/07/2000	14:02	08/07/2000	14:02	2	90	6	254	CRD-THIB	LA DEPT OF NAT RES (CRDNO)	G. Snedden;M. Sealy		
BS03A-11	1	08/07/2000	14:02	08/07/2000	14:02	2	90	7	219	CRD-THIB	LA DEPT OF NAT RES (CRDNO)	G. Snedden;M. Sealy		
BS03A-11	1	08/07/2000	14:02	08/07/2000	14:02	2	90	8	224	CRD-THIB	LA DEPT OF NAT RES (CRDNO)	G. Snedden;M. Sealy		
BS03A-11	1	08/07/2000	14:02	08/07/2000	14:02	2	90	9	246	CRD-THIB	LA DEPT OF NAT RES (CRDNO)	G. Snedden;M. Sealy		
BS03A-11	1	08/07/2000	14:02	08/07/2000	14:02	3	180	1	38	CRD-THIB	LA DEPT OF NAT RES (CRDNO)	G. Snedden;M. Sealy		
BS03A-11	1	08/07/2000	14:02	08/07/2000	14:02	3	180	2	39	CRD-THIB	LA DEPT OF NAT RES (CRDNO)	G. Snedden;M. Sealy		
BS03A-11	1	08/07/2000	14:02	08/07/2000	14:02	3	180	3	363	CRD-THIB	LA DEPT OF NAT RES (CRDNO)	G. Snedden;M. Sealy		
BS03A-11	1	08/07/2000	14:02	08/07/2000	14:02	3	180	4	115	CRD-THIB	LA DEPT OF NAT RES (CRDNO)	G. Snedden;M. Sealy		
BS03A-11	1	08/07/2000	14:02	08/07/2000	14:02	3	180	5	82	CRD-THIB	LA DEPT OF NAT RES (CRDNO)	G. Snedden;M. Sealy		
BS03A-11	1	08/07/2000	14:02	08/07/2000	14:02	3	180	6	74	CRD-THIB	LA DEPT OF NAT RES (CRDNO)	G. Snedden;M. Sealy		
BS03A-11	1	08/07/2000	14:02	08/07/2000	14:02	3	180	7	105	CRD-THIB	LA DEPT OF NAT RES (CRDNO)	G. Snedden;M. Sealy		
BS03A-11	1	08/07/2000	14:02	08/07/2000	14:02	3	180	8	115	CRD-THIB	LA DEPT OF NAT RES (CRDNO)	G. Snedden;M. Sealy		
BS03A-11	1	08/07/2000	14:02	08/07/2000	14:02	3	180	9	166	CRD-THIB	LA DEPT OF NAT RES (CRDNO)	G. Snedden;M. Sealy		
BS03A-11	1	08/07/2000	14:02	08/07/2000	14:02	4	270	1	261	CRD-THIB	LA DEPT OF NAT RES (CRDNO)	G. Snedden;M. Sealy		
BS03A-11	1	08/07/2000	14:02	08/07/2000	14:02	4	270	2	219	CRD-THIB	LA DEPT OF NAT RES (CRDNO)	G. Snedden;M. Sealy		
BS03A-11	1	08/07/2000	14:02	08/07/2000	14:02	4	270	3	211	CRD-THIB	LA DEPT OF NAT RES (CRDNO)	G. Snedden;M. Sealy		
BS03A-11	1	08/07/2000	14:02	08/07/2000	14:02	4	270	4	286	CRD-THIB	LA DEPT OF NAT RES (CRDNO)	G. Snedden;M. Sealy		
BS03A-11	1	08/07/2000	14:02	08/07/2000	14:02	4	270	5	266	CRD-THIB	LA DEPT OF NAT RES (CRDNO)	G. Snedden;M. Sealy		
BS03A-11	1	08/07/2000	14:02	08/07/2000	14:02	4	270	6	138	CRD-THIB	LA DEPT OF NAT RES (CRDNO)	G. Snedden;M. Sealy		
BS03A-11	1	08/07/2000	14:02	08/07/2000	14:02	4	270	7	211	CRD-THIB	LA DEPT OF NAT RES (CRDNO)	G. Snedden;M. Sealy		
BS03A-11	1	08/07/2000	14:02	08/07/2000	14:02	4	270	8	212	CRD-THIB	LA DEPT OF NAT RES (CRDNO)	G. Snedden;M. Sealy		
BS03A-11	1	08/07/2000	14:02	08/07/2000	14:02	4	270	9	182	CRD-THIB	LA DEPT OF NAT RES (CRDNO)	G. Snedden;M. Sealy		

Format 6: Accretion data format.

Station ID	Group	Sample Date (mm/dd/yyyy)	Sample Time (hh:mm)	Establishment Date (mm/dd/yyyy)	Establishment Time (hh:mm)	Core X:Y	Accretion Measurement 1 (mm)	Accretion Measurement 2 (mm)	Accretion Measurement 3 (mm)	Accretion Measurement 4 (mm)	Core Conditions	Organization	Personnel	Notes
BS03a-11	A	01/24/2001	15:05	01/05/2000	09:00	3:2								
BS03a-11	A	01/24/2001	15:05	01/05/2000	09:00	1:2	23.1	27.7	27.3	21.4				
BS03a-11	B	01/24/2001	15:05	01/05/2000	09:00	1:4								
BS03a-11	B	01/24/2001	15:05	01/05/2000	09:00	4:3								
BS03a-11	B	01/24/2001	15:05	01/05/2000	09:00	4:4								
BS03a-11	B	01/24/2001	15:05	01/05/2000	09:00	1:1	5.4	6.2	12.3	10.1				
BS03a-12	A	01/25/2001	16:00	01/05/2000	10:00	1:3	3.2	2	1	2.1				
BS03a-12	A	01/25/2001	16:00	01/05/2000	10:00	2:2	3.8	4	3.8	1.3				
BS03a-12	B	01/25/2001	16:00	01/05/2000	10:00	3:1	1.3	2.2	3.9	2.7				
BS03a-12	B	01/25/2001	16:00	01/05/2000	10:00	3:4	5.3	3.9	3.3	4.7				
BS03a-13	A	01/25/2001	12:39	01/05/2000	11:00	1:2								
BS03a-13	A	01/25/2001	12:39	01/05/2000	11:00	1:4								
BS03a-13	B	01/25/2001	12:39	01/05/2000	11:00	4:3								
BS03a-13	B	01/25/2001	12:39	01/05/2000	11:00	4:4								
BS03a-13	B	01/25/2001	12:39	01/05/2000	11:00	2:2								
BS03a-14	A	01/23/2001	16:22	01/05/2000	12:00	3:1	10.9	10.8	11.8	10.8				
BS03a-14	A	01/23/2001	16:22	01/05/2000	12:00	3:4	22.2	9.1	8.3	23.9				
BS03a-14	B	01/23/2001	16:22	01/05/2000	12:00	1:1	3.8	6	5.5	5.8				
BS03a-15R	A	01/23/2001	12:50	01/05/2000	12:30	1:3	23.9	17.3	21.6	25				
BS03a-15R	B	01/23/2001	12:57	01/05/2000	12:30	2:2								
BS03a-15R	B	01/23/2001	13:05	01/05/2000	12:30	3:1	17.4	16.4	15.8	16.5				
BS03a-16R	A	01/23/2001	10:52	01/05/2000	13:45	3:4	3.7	3.9	3.1	2.7				
BS03a-16R	B	01/23/2001	10:52	01/05/2000	13:45	4:2	3.3	1.1	1.5	1.4				

Format 7: Emergent vegetation data format (1 of 3).

Station ID	Group	Plot Size (m2)	Collection Date (mm/dd/yyyy)	Community	Sample Type	Vegetation Type	% Cover Total	% Cover Tree	% Cover Shrub	% Cover Herb	% Cover Carpet	Average Height Dominant (cm)
TE24-75	Bay	4	08/26/1999	Barrier Island	Random	Planted	20					100
TE24-75	Bay	4	08/26/1999	Barrier Island	Random	Planted	20					100
TE24-75	Bay	4	08/26/1999	Barrier Island	Random	Planted	20					
TE24-76	Bay	4	08/26/1999	Barrier Island	Random	Planted	30					100
TE24-76	Bay	4	08/26/1999	Barrier Island	Random	Planted	40					100
TE24-76	Bay	4	08/26/1999	Barrier Island	Random	Planted	20					100
TE24-76	Bay	4	08/26/1999	Barrier Island	Random	Planted	10					

Format 7 (cont.): Emergent vegetation format (2 of 3).

Average Height Tree (cm)	Average Height Shrub (cm)	Average Height Herb (cm)	Average Height Carpet (cm)	Scientific Name	Common Name	% Cover	Braun-Blanquet Rank
				Spartina patens (Ait.) Muhl.	MARSHHAY CORDGRASS	15	2
				Cynodon dactylon (L.) Pers.	COMMON BERMUDAGRASS	5	1
				Bare Ground	Bare Ground	80	
				Sesbania herbacea (P. Mill.) McVaugh	bigpod sesbania		
				Spartina patens (Ait.) Muhl.	MARSHHAY CORDGRASS	16	2
				Cynodon dactylon (L.) Pers.	COMMON BERMUDAGRASS	14	2
				Bare Ground	Bare Ground	70	

Format7 (cont.): Emergent vegetation format (3 of 3).

In/Out	Number Planted	Number Alive	Additional Species Description	Organization	Personnel	Comments
Both	16	16		LA DEPT OF NAT RES (CRDT)	L. Aucoin; J. Young; C. Thibodeaux	
Both				LA DEPT OF NAT RES (CRDT)	L. Aucoin; J. Young; C. Thibodeaux	
Both				LA DEPT OF NAT RES (CRDT)	L. Aucoin; J. Young; C. Thibodeaux	
Out				LA DEPT OF NAT RES (CRDT)	L. Aucoin; J. Young; C. Thibodeaux	
Both	16	13		LA DEPT OF NAT RES (CRDT)	L. Aucoin; J. Young; C. Thibodeaux	
Both				LA DEPT OF NAT RES (CRDT)	L. Aucoin; J. Young; C. Thibodeaux	
Both				LA DEPT OF NAT RES (CRDT)	L. Aucoin; J. Young; C. Thibodeaux	

Format 8: Forest community vegetation data format (1 of 2).

Station ID	Group	Plot Size (m2)	Collection Date (mm/dd/yyyy)	Community	Sample Type	Densiometer Reading #1	Densiometer Reading #2	Densiometer Reading #3	Densiometer Reading #4	Average Densiometer Reading	Canopy Cover (%)
CRMS0465F1	R	400	06/25/2010	Swamp	Random	90	92	94	92	92	65
CRMS0465F1	R	400	06/25/2010	Swamp	Random	90	92	94	92	92	65
CRMS0465F1	R	400	06/25/2010	Swamp	Random	90	92	94	92	92	65

Format 8 (cont.): Forest community vegetation data format (2 of 2).

Tree Number	Scientific Name	Common Name	Diameter (cm)	Shifted DBH (y/n)	Distance Aboveground (cm)	Additional Species Description	Organization	Personnel	Comments
1	Nyssa aquatica L.	WATER TUPELO	37	n			LA DEPT OF NAT RES (CRDT)	J.West;T.Folse	
2	Nyssa aquatica L.	WATER TUPELO	51	n			LA DEPT OF NAT RES (CRDT)	J.West;T.Folse	
3	Celtis laevigata Willd. var. reticulata (Torr.) L. Benson	netleaf hackberry	24	n			LA DEPT OF NAT RES (CRDT)	J.West;T.Folse	

Format 9: Soil core data format.

Station ID	Group	Sample Date (mm/dd/yyyy)	Core # (1-3)	Sample Depth (cm)	Wet Soil pH (pH units)	Dry Soil pH (pH units)	Soil Specific Conductance (uS/cm)	Soil Salinity (ppt)	Soil Moisture Content (%)	Bulk Density (g/cm3)	Organic Matter (%)	Wet Volume (cm3)	Dry Volume (cm3)	Organization	Personnel	Comments
CRMS0612-S01		04/28/2005	1	0 to 4										3001 Inc	J. Smith	core contained tar
CRMS0612-S01		04/28/2005	1	4 to 8												
CRMS0612-S01		04/28/2005	1	8 to 12												
CRMS0612-S01		04/28/2005	1	12 to 16												
CRMS0612-S01		04/28/2005	1	16 to 20												
CRMS0612-S01		04/28/2005	1	20 to 24												
CRMS0612-S01		04/28/2005	1	0 to 16												
CRMS0612-S01		04/28/2005	2	0 to 4												
CRMS0612-S01		04/28/2005	2	4 to 8												
CRMS0612-S01		04/28/2005	2	8 to 12												
CRMS0612-S01		04/28/2005	2	12 to 16												
CRMS0612-S01		04/28/2005	2	16 to 20												
CRMS0612-S01		04/28/2005	2	20 to 24												
CRMS0612-S01		04/28/2005	2	0 to 16												
CRMS0612-S01		04/28/2005	3	0 to 4												
CRMS0612-S01		04/28/2005	3	4 to 8												
CRMS0612-S01		04/28/2005	3	8 to 12												
CRMS0612-S01		04/28/2005	3	12 to 16												
CRMS0612-S01		04/28/2005	3	16 to 20												
CRMS0612-S01		04/28/2005	3	20 to 24												
CRMS0612-S01		04/28/2005	3	0 to 16												

Format 10: Submerged aquatic vegetation data format.

PROJECT	STATION	GROUP	DATE	COMMUNITY	SAMPLE NUMBER	SPECIES	DEPTH
			(MM/DD/YYYY)				(cm)
TE-28	TE28-158	CTU1	10/31/2002	FRESHWATER	1	Ceratophyllum demersum	100
TE-28	TE28-158	CTU1	10/31/2002	FRESHWATER	2	Ceratophyllum demersum	
TE-28	TE28-158	CTU1	10/31/2002	FRESHWATER	3	Ceratophyllum demersum	
TE-28	TE28-158	CTU1	10/31/2002	FRESHWATER	4	Ceratophyllum demersum	
TE-28	TE28-158	CTU1	10/31/2002	FRESHWATER	5	Ceratophyllum demersum	100
TE-28	TE28-158	CTU1	10/31/2002	FRESHWATER	6	Ceratophyllum demersum	
TE-28	TE28-158	CTU1	10/31/2002	FRESHWATER	7	Ceratophyllum demersum	
TE-28	TE28-158	CTU1	10/31/2002	FRESHWATER	8		
TE-28	TE28-158	CTU1	10/31/2002	FRESHWATER	9	Ceratophyllum demersum	
TE-28	TE28-158	CTU1	10/31/2002	FRESHWATER	10		
TE-28	TE28-158	CTU1	10/31/2002	FRESHWATER	11		70
TE-28	TE28-158	CTU1	10/31/2002	FRESHWATER	12	Ceratophyllum demersum	
TE-28	TE28-158	CTU1	10/31/2002	FRESHWATER	13		
TE-28	TE28-158	CTU1	10/31/2002	FRESHWATER	14		120

Format 11: Marsh elevation survey data format.

LA DNR Survey -- PROJECT NAME

Station: BA02-55
Date and Time: APRIL 23, 2003 & 10:30
Staff Gauge Reading: 1.58 FT.
Marsh Flooded: YES

Point Number	Easting (UTM_NAD83_METERS)	Northing (UTM_NAD83_METERS)	Elevation (NAVD88_FEET)
1	766,129.90	3,271,789.89	1.456
2	766,115.57	3,271,789.89	1.402
3	766,101.61	3,271,789.89	1.429
4	766,087.41	3,271,789.89	1.384
5	766,071.05	3,271,789.89	1.353
6	766,070.96	3,271,775.12	1.484
7	766,086.52	3,271,775.12	1.337
8	766,101.32	3,271,775.12	1.497
9	766,116.98	3,271,775.12	1.502
10	766,132.05	3,271,775.12	1.466
11	766,070.96	3,271,752.77	1.511
12	766,086.52	3,271,752.77	1.347
13	766,101.32	3,271,752.77	1.281
14	766,116.98	3,271,752.77	1.312
15	766,132.05	3,271,752.77	1.423
16	766,070.96	3,271,718.46	1.444
17	766,086.52	3,271,718.46	1.602
18	766,101.32	3,271,718.46	1.399
19	766,116.98	3,271,718.46	1.455
20	766,132.05	3,271,718.46	1.389
AVERAGE MARSH ELEVATION			**1.42365**
MARSH ELEVATION			**1.42**

NOTES / INSTRUCTIONS:

1. Marsh elevation is the average of all the marsh shots.
2. Coordinate system must be properly labeled under the Northing and Easting headings.
3. Vertical datum must be properly labeled under the Elevation heading.
4. A new sheet must be generated for each station.

APPENDIX C

SOIL LABORATORY PROTOCOLS

Coastal Wetlands Soils Characterization Lab
Louisiana State University, Baton Rouge

Standard Operating Procedures for Coast-Wide Reference Monitoring System (CRMS) – Wetlands Project

The objective of these Standard Operating Procedures (SOPs) is to provide a standardized procedure for soil samples analysis. This procedure will be used by Coastal Wetland Soils Characterization Lab for analyzing the soil samples from Coast-wide Reference Monitoring System (CRMS) –Wetlands Project (CRMS). These SOPs contain the following sections.

Sample Delivery

All soil samples will be delivered to the LSU Ag Center Coastal Wetlands Soils Characterization Laboratory on ice in labeled, sealed containers (Glad brand zipper bags). The samples will be analyzed for the following parameters:

1. Soil pH
2. Soil Salinity (EC)
3. Bulk density (oven dry)
4. Soil moisture
5. Percent organic matter (loss-on-ignition; LOI)
6. Wet/dry volume

Chain of Custody

A chain of custody form will be completed documenting receipt of samples (provided by LSU).

Storage Protocol

All samples will be cold-stored (4°C) from the time of receipt until the samples are processed and analyzed.

Analysis Protocols:

Soil pH

Soil reaction (pH) is affected by the ration of soil:water, the salt content, time of reaction and the CO_2 content. It is therefore necessary to standardize conditions to obtain reproducible results.

I. Materials

1. Deionized water
2. Glassware
3. pH meter (ORION 710A)
4. Balance (OHAUS TS400)

II. Procedure

1. Record soil sample I.D. number into laboratory log book.
2. Take a sub sample of the soil sample from the container.
3. Weigh duplicate 20 gram samples of fresh soil samples into beakers and record (Wet Sample Weight).
4. Add 20 cc of deionized water.
5. Stir for one minute at 30 minute intervals for 1 hour.
6. Calibrate pH meter before measuring the samples using pH buffer 4.0 and 7.0. Recheck the meter with pH buffer 7.0 between every ten samples. If the meter does not read 7.0, recalibrate the meter, re-read any suspect previous samples, and proceed with the remaining samples.
7. Record the pH value after the meter is stable (approximately 1 minute after immersing the electrode).
8. No soil sample should be destroyed or compromised as it will be added back to the soil analyzed for bulk density for homogenization and subsequent percent organic analysis.

III. Calculations

The results of soil pH will be reported based on the average of two replications.

IV. QA/QC

1. Use stopwatch for stirring the samples (all samples are done consistently).
2. Make sure the labels are correct and the data are recorded in the right position.
3. Make sure the samples are already mixed thoroughly.
4. Run for the two replications of the sample.
5. If the difference between the pH values of the two replications (rep1 and rep2) of a sample is greater than 0.5, then repeat the analysis for that particular sample.

Soil Salinity (EC)

EC is measured in mS/cm (milliSiemens per centimeter) and gives an indication of soil salinity measured in ppt (parts per thousand). One mS/cm is equivalent to one mmhos/cm (millimhos per centimeter). Various EC meters measure in different ranges. Some meters even read low enough levels to measure in µS/cm (microSiemens per centimeter). It takes 1,000 µS/cm to equal one mS/cm or one mmhos/cm.

Laboratories commonly make measurements on a 1:1 by weight of soil-to-water slurry. The 1:1 soil: water slurry method is the procedure used by the Coastal Wetlands Soils Characterization Lab, Dept. of Agronomy & Environmental Management, Louisiana State University. EC analysis will use the same solution which was prepared for pH analysis.

I. Materials

1. Conductivity meter (Thermo Orion 150A+)
2. Calibration solutions (12.9 mS/cm and 1413µS/cm)
3. Deionized water

II. Procedure

1. Record soil sample I.D. number into laboratory log book.
2. Take a sub sample of the soil sample from the container.
3. Weigh duplicate 20 gram samples of fresh soil samples into beakers and record (Wet Sample Weight).
4. Add 20 cc of deionized water.
5. Stir for one minute at 30 minute intervals for 1 hour.
6. Record the EC value after the meter is stable (approximately 1 minute after immersing the electrode).
7. No soil sample should be destroyed or compromised, as it will be added back to the soil analyzed for bulk density for homogenization and subsequent percent organic analysis.

III. Calculations

The results of soil EC will be reported based on the average of two replications.

IV. QA/QC

1. Follow the procedure described in pH measurement.
2. Calibrate the EC meter between every measurement and check the reading in standard solutions (12.9 mS/cm or 1413µS/cm) every 10 samples.
3. If the difference between the EC values of the sample and its duplicate is greater than 0.2 ppt (or 500 µS), then repeat the analysis for that particular sample.
4. Sequence of reading and time between samples must be consistent.

Bulk Density, Soil Moisture, and Wet/Dry Volume Ratio

Bulk density is defined as the total weight of material in a known volume of sample and is given in units of grams per cubic centimeter (g/cm^3). Bulk density includes both the organic and the inorganic fractions. Bulk density may be expressed as either wet bulk density (includes the water in the sample) or as dry bulk density (the sample is allowed to dry). However, since the convention is normally to use dry bulk density, this discussion is confined to that variable. It has been shown (Gosselink and Hatton 1984) that soil density is controlled by the amount of mineral material that infiltrates the organic material framework of the highly organic marsh soils. This organic material framework appears to have a fairly constant ratio of mass to volume. Dry bulk density values generally range from 0.05 g/cm^3 to 1.25 g/cm^3. In highly organic soils, such as those found in coastal marshes, it is more meaningful to express soil nutrients in terms of volume instead of mass (Clarke and Harmon 1967; Mehlich 1972; Delaune et al. 1979; Rainey 1979). Since vegetation roots invade a given volume of soil as opposed to a given mass of soil, plant biomass shows a better relationship to soil nutrients expressed on a per volume basis as opposed to a per mass basis (Delaune et al. 1979).

For Wet/Dry Volume Ratio, all soil samples are stored in the refrigerator and maintained at a constant temperature of 4 °C. It is assumed that all samples are identical and at this temperature the density of water is equal to 1 g cm^{-3} which means that 1 g of water will have a volume of 1 cm^3.

I. Materials

1. Soil sample of known volume
    a. Cylinder of radius r (cm), height h (cm): Volume (V, cm^3) = $\pi r^2 h$
2. Drying oven
3. Balance sensitive to 0.01 g
4. Desiccator

II. Procedure

1. Soil samples will be dried in the laboratory in the containers provided from the field collection. Glad brand zipper bags will be used to contain all soil samples since the type, brand, and size of the containers used must be consistent over time such that they can withstand a temperature of at least 60ºC. Quart size bags will be used for sliceable, 4-cm soil samples and gallon size bags will be used for 16-cm composite soil samples. In the event that the Glad brand zipper bag is compromised in transport or elsewhere, an average weight of 100 bags including any labels will be used as the container tare weight (Vessel Weight) for those calculations.
2. Record soil sample number.
3. Weigh vessel + sample (Vessel + Sample $_{wet}$) to nearest 0.01 g to obtain Wet Sample Weight and record.
4. Place vessel + sample in forced-air drying oven set at 60 ^{0}C for 48 hrs.
5. Remove all samples from the oven (Vessel + Sample $_{dry}$), allow to cool in a desiccator, weigh and record to obtain Dry Sample Weight.
6. Return all samples to the oven (60 ^{0}C) for 6 hrs, cool and re-weigh. If weights are within $\pm$5% of the original dried weight, proceed to calculations. If weights are > $\pm$5%, place these samples back

into the 60 ^{0}C oven for 24 hrs, cool, and weigh. Repeat this process until a constant weight is obtained.

7. Record weight to nearest 0.01 g (Dry Sample Weight).

III. Calculations

1. Wet Sample Weight (g) = (Vessel + Sample $_{wet}$) – Vessel Weight

2. Dry Sample Weight (g) = (Vessel + Sample $_{dry}$) – Vessel Weight

3. Oven Dry Bulk Density (g/cm^3) = (Dry Sample Weight) / (Volume of Soil Sample)

4. Soil Moisture Content = [(Wet Sample Weight – Dry Sample Weight) / (Wet Sample Weight)] * 100

5. Wet Soil Volume (cm^3) = (Volume of Soil Sample) + (Volume of Water)

   Where: Volume of Soil Sample (V, cm^3) = $\pi r^2 h$
   = 324.128 cm^3
   r = radius of core
   =5.08 cm
   h = height of samples
   =4 cm

6. Dry Soil Volume (cm^3) = (Volume of Soil Sample) – (Volume of Water)

7. Wet/Dry Volume Ratio = (Wet Soil Volume) / (Dry Soil Volume)

IV. QA/QC

1. All samples will be dried to a constant weight as a QA/QC check.

Percent Organic Content (Loss-on-Ignition, LOI)

Organic matter in soils and sediments is widely distributed in almost all terrestrial and aquatic environments (Schnitzer, 1978). Soils and sediments contain a large variety of organic materials. The determination of organic carbon is an essential part of any site characterization since its presence or absence can markedly influence how chemicals react in the soil or sediment. Organic carbon contents may be used qualitatively to assess the nature of the sampling location or to normalize portions of the analytical chemistry data set. Loss-on-ignition (LOI) is a common and widely used method to estimate the organic matter content (Heiri, et al., 2001) and involves the heated destruction of all organic matter in the soil or sediment.

I. Materials

1. 2-mm sieve (No. 10)
2. **Ashing crucibles, numbered**
3. Muffle furnace
4. Analytical balance (0.001g sensitivity)
5. Safety gloves (thermal and plastic)
6. Desiccator

II. Procedure

1. Add all soil that was originally sub-sampled and used in the pH and soil salinity analyses to the remaining dried soil analyzed for bulk density.
2. Grind the dried soil sample (above) through a 2-mm (No. 10) sieve screen.
3. Randomly select 10% of the samples to be analyzed for QA/QC and run replicate analyses.
4. Record the soil sample I.D. number, the crucible I.D. number, and the crucible tare weight into a laboratory log book.
5. Thoroughly homogenize the ground soil sample.
6. Weigh approximately 2-3 g of dried and ground soil that has passed through a 2-mm sieve into a clean crucible.
7. Record the crucible + soil sample weight (Crucible + Soil Wt. B_{60}) into a laboratory log book.
8. Place crucible + soil into a cool muffle furnace and bring temperature to 550 ºC. Once the target temperature has been reached, ash in the furnace for 2 hrs.
9. Remove crucible + soil sample (Crucible + Soil Wt. A_{550}) from the furnace using safety gloves. Allow to air-cool slightly then place in a desiccator (to prevent moisture accumulation).
10. Once cool, weigh to the nearest 0.01 g and record data in laboratory log book.
11. Calculate the percent organic matter of the soil sample following the formula below.

III. Calculations

1. Percent organic matter:

$$\% \text{ O.M.} = \frac{[(\text{Soil Wt. } B_{60}) - (\text{Soil Wt. } A_{550})]}{(\text{Soil Wt. } B_{60})} \times 100$$

Where: Soil Wt. B_{60} = Weight of soil samples before ashing (previously dried at 60°C)
= [(Crucible + Soil Wt. B_{60}) – (Crucible)]
Soil Wt. A_{550} = Weight of soil samples after ashing (at 550°C)
= [(Crucible + Soil Wt. A_{550}) – (Crucible)]

IV. QA/QC

1. Replicates of 10% of samples will be run as a QA/QC check.
2. Calculate the percent difference between the replicate samples selected for QA/QC. If the sample organic content is within ± 5% of each other, record the primary reading as the final reading.
3. If the QA/QC samples are not within ± 5% of each other, repeat the ashing and weighing process for all samples until a constant weight is obtained and the organic content is within ± 5%.

Data Reporting and Transferal

Data reporting will be done by the laboratory as soon as the samples are analyzed. A report will be sent to the monitoring manager that will document the following:

1. Batch and sample ID information
2. Values of standards
3. Results of QC checks
4. Analysis results in format provided by LDNR.
5. Discussions of any problems along with steps taken to address them.

Data validation for this method consists of checking to be sure that all sample containers are properly labeled and that sample numbers and crucible numbers are double checked by laboratory personnel during analysis procedures. In addition, the laboratory personnel must be sure to check the labels on the standards before use.

Appendix C: Soil Laboratory Protocols

Example of a Chain of Custody Form:

Project / Sample / Contact Information

Project # :	
Project Name:	
Report Copy to:	

Analyses Request - All Samples

Soil pH	**Soil Salinity (EC)**
Bulk Density	**Percent Organic (LOI)**
Soil Moisture	**Wet/Dry Volume**

Sample Information				**Client Sample ID (13 Characters Max)**																
Date Sampled	**Time**	**Sample Type**	**Matrix-Soils**	**Geo. Area**	**Geo. Basin**	**CRMS Yr.**	**Site No.**	**Core No.**	**Section No.**							**Date Shipped**	**Container No.**	**Log Date**	**Lab ID**	**QC Notes**

Sampled By:			
Relinquished By:		Received By:	
Relinquished Date:		Date Received:	

Signature

Date

Example of a Site Summary Data Report.

Coastwide Reference Monitoring System (CRMS)
Site Summary - Data Report

Samples Taken:	
Samples Received:	
Samples Analyzed:	

Dates			Sample ID						Lab	pH (1:1)		EC (1:1) mS/cm		Bulk Density (g/cm3)		Moisture	O.M.	Wet/Dry
Sampled	Logged	Completed	Area	Basin	Yr.	Site	Core	Section	No.	Wet	Dry	Wet	Dry	Field	Dry	%	%	Volume

References

Clarke, C.D., and N.J. Harmon. 1976. The Mangrove swamp and salt marsh communities of the Sydney district. J. Ecol. 55:753-771.

DeLaune, R.D., R.J. Buresh, and W.H. Patrick, Jr. 1979. Relationships of soil properties to standing crop biomass of *Spartina alterniflora* in a Louisiana salt marsh. Esturine Coastal Mar. Sci. 8:477-487.

Gosselink, J.G., and R. Hatton. 1984. Relationship of organic carbon and mineral content to bulk density in Louisiana marsh soils. Soil Science 137(3):177-180.

Henri, O., A.F. Lotter, and G. Lemcke. 2001. Loss on ignition as a method for estimating organic and carbonate content in sediments: reproducibility and comparability of results: *Journal of Paleolimnology* 25:101-110.

Mehlich, A. 1972. Uniformity of soil test results as influenced by volume weight. Commun. Soil Sci. Plant Anal. 4(6):475-486.

Rainey, G.B. 1979. Factors affecting nutrient chemistry distribution in Louisiana coastal marshes. M.S. Thesis, Louisiana State University, Baton Rouge, LA.

Schnitzer, M. 1978. Humic substances: Chemistry and reactions. *In*: Soil Organic Matter, M. Schnitzer and S.U. Khan, Ed. Elsevier Scientific Publishing Co., New York. p. 1-64.

ADDENDUM 1

HYDROLAB MS5

Addendum 1: Hydrolab MS5

August 19, 2005

TO: Richard Raynie, Coastal Resource Scientist Manager

THROUGH: Darin Lee, Coastal Resource Scientist Supervisor

FROM: Todd Folse, Coastal Resource Scientist III

SUBJECT: ADDENDUM #1 TO THE STANDARD OPERATING PROCEDURES MANUAL (AUGUST 5, 2005 VERSION) REGARDING THE HYDROLAB MS5 RECORDER: FILE MANAGEMENT PROCEDURES, FIELD DEPLOYMENT, CALIBRATION, SENSOR SELECTION, WATER LEVEL SENSOR DISTANCE, AND BATTERY

Due to the differences among the previously used continuous recorders purchased and deployed by the Louisiana Department of Natural Resources / Coastal Restoration Division for project specific monitoring, the following changes shall be approved to compensate for the new Hydrolab MS5 continuous recorders.

FILE MANAGEMENT PROCEDURE

The Louisiana Department of Natural Resources / Coastal Restoration Division has implemented the following procedure which consists of a two file system – a back-up and working file. The following provides an outline of how the MS5 file system shall be established and maintained.

1. Upon initial deployment at a station or when an instrument is moved from a station to another station, a file shall be established such that it begins at the date and time of deployment and ends a year later. This file shall be known as the *back-up* file and shall not be stopped or deleted until the instrument is removed from the station or the year has ended. The file shall only be accessed if problems occur with the working file. The *back-up* file naming convention shall follow: C0612YRH1 where C represents the project (CRMS), 0612 represents the site number, YR designates the file as a yearly file, H designates the station as hydrologic, and 1 represents the station number. Although the instrument is capable of handling more than 8 characters, the naming convention established by DNR/CRD shall be followed.
2. A second file shall be established. This file shall be referred to as the *working file*. The working file shall be established upon deployment and shall be deleted during servicing after downloading and prior to establishment of the subsequent file. When the instrument is deployed the file shall be established according to the protocols set forth in the SOP. The difference is that an ending date must be entered into the file. The ending date shall be no less than six (6) months from the date of establishment. The instrument is then deployed to record in an unattended mode. Upon servicing which should take place approximately 30 days after the file was established, the same procedures in the SOP apply except that the working file must be downloaded then deleted. The Hydrolab MS5 does not have the ability to stop the file at any time. The Hydrolab MS5 can only delete the file. A file can be deleted at any time. Consequently, the order in which servicing shall take place is as follows: record date and time of arrival and instrument date and time to verify the time is within a few minutes of each other,

download the file from the MS5, take dirty reading, clean the instrument, change batteries, take clean readings, calibrate water level, calibrate specific conductance (if needed), verify the working file has been downloaded to the field interface, delete the working file, and deploy the instrument using a new working file name. The *working* file naming convention shall follow: C061201H1 where C represents the project (CRMS), 0612 represents the site number, 01 designates the month in which the file was established, H designates the station as hydrologic, and 1 represents the station number. Although the instrument is capable of handling more than 8 characters, the naming convention established by DNR/CRD shall be followed.

By using this back-up and working file system for file management, there should only be two files on the continuous recorder at a time. Should a problem occur with the working file, the data shall be retrieved from the back-up by downloading the entire file to the field interface (Surveyor, laptop, palm pilot, etc.). This file shall not be deleted unless it is the end of the year, the instrument is moved to another station, or upon deployment with files from the office or from being repaired.

ALTERNATIVE FIELD DEPOLYMENT METHOD OF THE RECORDER: Modification to the PVC Well

Since the Hydrolab MS5 continuous recorder has a smaller diameter than the instruments previously used on project specific monitoring tasks, an alternative technique from the SOP has been developed for housing the recorder in the field. This change only pertains to the PVC pipe in which the recorder rests while in an unattended mode collecting water quality samples.

Materials List (Changes from the SOP):
1 – 3" Schedule 40 PVC pipe (SOP calls for 2" or 4" Schedule 40 PVC pipe)
1 – 2" Schedule 40 Flat top PVC cap (SOP does not list this piece)
1 – 1" Schedule 40 PVC pipe (SOP calls for 1½" Schedule 40 PVC pipe)
1 – 1½" hole bit (SOP does not list this piece)
1 – 5/8" drill bit (SOP does not list this piece)

Procedures:

1. Cut the 3" Schedule 40 PVC pipe according to specifications outlined in the SOP for the 2" or 4" PVC pipe.
2. Drill holes in the 3" PVC pipe according to the specifications outlined in the SOP. Note: These holes allow water exchange through the pipe around the sensors so water does not become stagnant causing a false reading.
3. Drill a 1½" hole a ¼" off center through the 2" Schedule 40 Flat top PVC cap.
4. The 1" Schedule 40 PVC pipe will be used as a locking pin. A 5/8" hole will be drilled in the field once the location of the hitch pin has been determined on the 4x4 post and through the 2x4 board.
5. Attaching the 3" Schedule 40 PVC pipe remains the same as specified in the SOP.

The following pictures show the cap resting on top of the continuous recorder and the instrument in a deployed position using all of the materials and procedures described above.

Figure 1: A 2" Schedule 40 PVC cap threaded through the cable and sitting on top of a Hydrolab MS5 continuous recorder.

Figure 2: Hydrolab MS5 resting in a 3" Schedule 40 PVC well with the 2" PVC cap and a 1" Schedule 40 PVC pipe.

CALIBRATION

Specific Conductance:
The Hydrolab MS5 requires a two or four point calibration to provide the most accurate readings. DNR/CRD requires the two point calibration system. The two point calibration system requires the calibration of the instrument out of the water (in air) and the calibration of the instrument in a known calibration solution.

According to the Hydrolab MS5 Water Quality Multiprobe User Manual Dated February 2005, Edition 1 page 25, the following procedures are necessary for calibrating the salinity probe.

1. Calibrate the sensor to zero.
2. Calibrate to the slope of the buffer by:
    a. Pouring the specific conductance standard to within a centimeter of the top of the calibration cup.
    b. Make sure there are no bubbles in the measurement cell of the specific conductance sensor.
    c. Enter the SpCond standard for the µS/cm.

Calibrating the sensor to zero is done while the sensor is exposed to air and there is not moisture (water droplets) on the sensor.

The calibration cup requires approximately 70-80 mL of solution in the cup to cover the sensor.

Water Level:
The Hydrolab MS5 requires the following information when calibrating the water level sensor: current depth (which will be 0.000 because it will be calibrated out of the water), altitude in feet (which for south Louisiana will be 0-20), and latitude in degrees (for south Louisiana it will be 29-31 using decimal places for the exact location may increase accuracy).

NOTE: The Thibodaux Field Office has done some testing with the instrument regarding the input of different altitudes and it does seem to affect the readings slightly (meaning to the hundredths and thousandths).

SENSOR SELECTION

The Hydrolab MS5 is designed such that the order in which the parameters / sensors are selected upon the initial arrangement of the instrument results in the order in which they are exported from the instrument. Since LDNR/CRD has developed QA/QC procedures that handle the data in a specific order, the parameters / sensors shall be selected in the following order to assure the data is placed within the correct columns during the data processing phase: Temp[ºC], SpCond[µS/cm], Sal[ppt], Depth10[feet], and Internal-Battery[volts]. This order ensures the data will be imported into the QA/QC Excel files in the correct order prior to data processing. Although date (mm/dd/yyyy) and time (hh:mm:ss) are not selected, verification that date and time are exported in the first two columns is critical to the order. As a result, the final order in which the instrument must export the data is as follows: date, time, temperature, specific conductance, salinity, depth, and battery volts.

WATER LEVEL SENSOR DISTANCE

In order to convert the water level data to the vertical datum (NAVD 88, Feet), the water level sensor measurements for the Hydrolab MS5 are as follows: (1) From the top of the white plastic on the battery compartment (top of instrument) to the water level sensor is 1.77 feet (20.18 inches) and (2) From the bottom of the cage to the water level sensor is 0.46 feet (5.50 inches). Either or both of these two values can be used to determine the 'Mark (Nail) To Sensor Distance' which is used to calculate the 'Sensor Elevation' once elevation has been established at the station on the nail.

LITHIUM BATTERY REPLACEMENT

Consult the 'Users Manual' but be aware that every 24 months (from the assembly date) the internal lithium battery must be changed to accurately power the internal clock.

ADDENDUM 2

DATA FILE FORMATS

Addendum 2: Data File Formats

August 19, 2005

TO: Richard Raynie, Coastal Resource Scientist Manager

THROUGH: Darin Lee, Coastal Resource Scientist Supervisor

FROM: Todd Folse, Coastal Resource Scientist III

SUBJECT: ADDENDUM #2 TO THE STANDARD OPERATING PROCEDURES MANUAL (AUGUST 5, 2005 VERSION) REGARDING DATA FILE FORMATS

Due to the advancement of the Louisiana Department of Natural Resources / Coastal Restoration Division's Strategic Online Natural Resources Information System (SONRIS) database, data file formats used for data delivery from the contractor to the department have changed since the completion of the Standard Operating Procedures (SOP) manual. This addendum addresses the changes associated with the continuous recorders (hydrologic and marsh mat) and discrete data sets.

The changes to the continuous recorder and discrete data sets are associated with sections 4.1.3, 4.2, 5.1.2, 5.2.4, 6.1.2, 6.2.3, and 7.7 of the SOP. The data processing protocol has not changed; however, changes have occurred to the worksheets where the data is formatted for the SONRIS database.

The 'Oracle' worksheet is the worksheet which is formatted for data loading. Changes to this worksheet include: the addition of the first column which places the station name in the worksheet, the addition of several other variables at the end of the older version to accommodate other variables from multiple recorders, and the inclusion of the "Organization Name" which is the company or organization that is responsible for collecting and processing the data. The "Organization Name" shall match the company or organization name that is listed in the project tracking table. For example, CES is a name listed in the project tracking table; therefore, CES must be used in this column.

Once the QA/QC process is complete, the 'Oracle' worksheet is saved as a comma delimited text file (.csv) as previously required. The difference is that the header is no longer is deleted; consequently, all added variables must remain in the .CSV file. This file is then loaded onto the FTP site using the naming convention established during the deployment of the field file but it must include the addition of the month placed on the FTP site as the first 2 characters. (Example – **07**C061205H1 where 07 is added as the month this file is placed on the FTP site the first time).

The affected files include the Sonde – QC, the Mat – QC, the Vertical Mat – QC, and the Discrete Hydrographic and Soil Porewater files. The new files which shall be used for the autoload process are located at: Dnr_btr\Vol2'(G:)\BMS_DAS\CRMS Implementation\QA-QC\QA-QC sheets. The files are named: Discrete Hydrographic and Soil Porewater_Autoload template_08092005.xls, MAT – QC_Autoload template_08192005.xls, SONDE – QC_Autoload template_08102005.xls, and Vertical Mat – QC_Autoload template_08192005.xls

ADDENDUM 3

SONRIS DATA ENTRY

Addendum 3: SONRIS Data Entry

August 19, 2005

TO: Richard Raynie, Coastal Resource Scientist Manager

THROUGH: Darin Lee, Coastal Resource Scientist Supervisor

FROM: Todd Folse, Coastal Resource Scientist III

SUBJECT: ADDENDUM #3 TO THE STANDARD OPERATING PROCEDURES MANUAL (AUGUST 5, 2005 VERSION) REGARDING THE SONRIS DATA ENTRY PROCEDURES

Due to the new developed automated data load process slight changes to the existing SOP with regards to section concerning loading data into the SONRIS database have changed.

Hydrologic Data SONRIS Data Entry –

Sections 4.1.3 / 5.2.4 / 7.3 -
The SOP and previous addendums should be followed with regard to files created and formats developed during QA/QC phases.

Data will now be automatically loaded into a SONRIS buffer from .csv files on the FTP site and then committed to the database by the DNR QA/QC officer after review and approval. Contractors will not have to come to any DNR Office to load hydrologic data (Continuous or Discrete) or marsh mat data.

1) .CSV files must be renamed at this time by adding the month placed on the FTP site as the first 2 characters. (Example – **07**C061205H1 where 07 is added as the month this file is placed on the FTP site the first time). Files will be QA'ed by monthly sets such that all files can be tracked in the database during DNR's QA/QC check. No files maybe added to the FTP site once DNR has been notified that the months data is on the FTP site and ready for QA.

2) Submitted files are subjected to an auto-check function on the FTP site and renamed according to their status (successful or failure). An auto-email function will generate and e-mail to specified individuals if a file fails. Any file that fails will not load to the SONRIS buffer. (E-mail Recipients must be assigned and updated)

3) Once all files are successfully loaded to the SONRIS buffer and e-mail should be sent, as previously done, to the DNR QA/QC officer so that data checks can be completed.

4) DNR QA will be done in the SONRIS Buffer.
   a. Data will be compared to a standard set of stations to insure data at all stations has been delivered. Consequently when data collection begins or ends at a station, DNR must be notified.
   b. Data quality will be accessed and if problems found an auto-email will be generated by the DNR QA Officer (E-mail Recipients must be assigned and updated) and ALL of

that months data set will be rejected from the SONRIS Buffer and files must be placed on the FTP site when corrected.

i. The corrected files must maintain the EXACT same name as when they were first placed on the FTP site.
ii. An e-mail, as previously required, should be sent to DNR when all files have been corrected and placed back on the FTP site. Also, a report and e-mail will be automatically generated from SONRIS telling DNR when all files in the rejected set are back on the FTP site and ready to be QA'ed

c. If data is accepted the DNR QA/QC Officer will mark the data as QA'ed and it will remain in the SONRIS Buffer.
d. The DNR QA/QC Officer will then commit the previous months data to the SONRIS database (ONLY IF ORIGINAL DATASHEETS AND ALL OTHER DELIVERABLES HAVE BEEN RECEIVED BY DNR – see #5) and complete the QA/QC sheets

5) The DNR QA/QC officer will send and e-mail stating the data has been accepted pending comparison with the following dataset and at that time all original datasheet and QA/QC sheets should be mailed to the respective DNR Office.

6) DNR QA/QC Officer will send and e-mail to Contract Manager, as was previously done, stating when data has been transferred from SONRIS Buffer to the SONRIS database

ADDENDUM 4

VEGETATION SAMPLING

Addendum 4: Vegetation Sampling

December 6, 2005

TO: Richard Raynie, Coastal Resources Scientist Senior

FROM: Todd Folse, Coastal Resources Scientist III

SUBJECT: ADDENDUM TO THE STANDARD OPERATING PROCEDURES MANUAL (AUGUST 5, 2005 VERSION): CHAPTER 10 EMERGENT VEGETATION

During the August 10, 2005 vegetation training seminar, personnel from the different field offices discovered slight variations amongst data collection procedures. Moreover, upper management personnel representing the Coastal Estuary Services, LLC posed questions not addressed or unclear in the SOP. This addendum clarifies those issues presented at the training seminar. As a result of the answers to some of the questions, the field data sheets for the herbaceous and swamp stations have been modified. At the bottom of the data sheet a section labeled 'Ancillary Data' has been added. Both data sheets have been included at the end of this addendum to show the changes. Field personnel shall print the data sheets from the electronic version and not photo copy the sheets attached to this document.

Station Establishment

1. *Station numbering procedure:* During the site's initial vegetative station establishment period, each individual station shall be numbered 1-10. However, upon completion of the station establishment, the stations may not be in numerical order along the transect. This is acceptable since stations have been randomized prior to field establishment. When establishing the stations in the field, stations may not meet the criteria which causes the station to be randomly selected along the transect possibly placing a station between two previously established stations.

   The numbering convention for each station is as follows (example uses CRMS0612 site): CRMS0612-V01 for herbaceous marsh vegetation station and CRMS0612-F01 for forested swamp vegetation station. CRMS0612 represents the site number followed by a hyphen (-), either 'V' for herbaceous marsh vegetation or 'F' for forested swamp station, then 01-10 for the first ten (10) stations established. The use of eleven (11) and greater will be used when stations need to be re-established.

2. *Station establishment around the boardwalk:* SOP statement – "If one of the primary stations is located in an area that is <55% marsh (i.e., the plot cannot be located in an area that is >45% continuous standing water), on a spoil bank, or within 10 meters of the RSET, marsh mat recorder, or any part of the boardwalk, the station will be dropped and a station from the secondary set will be used." This statement is found in Chapter 10.1, page 137, paragraph 2, sentence 5 and Chapter 10.2, page 142, paragraph 2, sentence 5, and has similar reference on page 138 last sentence of the page and page 144, paragraph 4, sentence 2. **The replacement sentence shall read:** "If one of the primary stations is located in an area that is <55% marsh (i.e., the plot can be located in an area that is >45% continuous standing water), on a spoil

bank, or within 10 meters of the RSET, the station will be dropped and a station from a secondary set will be used."

This description now places a buffer around the base boardwalk and the data collecting stations allowing a sufficient area for all stations around the boardwalk to remain unaffected by any foot traffic or airboat traffic on the marsh surface. It excludes any reference to the access boardwalk.

3. *Sinking of metal rods to mark the corner of a station:* Metal rods shall remain at least six (6) inches above the surface upon establishment. Metal rods shall not be completely driven into the ground. Although sinking them completely into the ground may reduce rusting and corrosion, a metal detector would be necessary to find the rod. Potentially, the vegetation station could be destroyed prior to sampling while roaming the marsh looking for the metal stack.

Data Collection

1. *Vegetation touching the boundary of the 2 meter or 10 meter grid, plant/tree rooted outside but covering inside of plot, and tree straddles the boundary line:* The 2 meter PVC square used to determine the boundary of the vegetation plot shall measure 2 meters on the inside of the square. Consequently, any vegetation touching the inside of the grid should be counted. Plants touching the exterior of the grid shall not be counted. When collecting data using this method, an imaginary line should be drawn from the soil surface to the sky and anything in that box should be documented or think of it from a bird's eye point of view. For a tree straddling the line, it shall be counted.

2. *Vines and laying vegetation—measuring height or length:* The purpose is to measure plant height (from ground surface to terminal end of the vegetation); therefore, vines shall not be measured. The plant species supporting the vines shall be measured. If the vines are the dominant species, then the co-dominant species shall be noted and measured.

3. *Dead verses living verses bare ground:* Dead refers to any plant material that no longer contains any green tissue. Living refers to any plant that is growing or a plant that has started to senesce. Bare ground is the area in the plot that has no living plant material covering the plot; this would include any dead material, soil covered in dead plant material, or bare soil.

4. *Cover estimates for dead verses senescing plants:* Dead plants shall be counted as bared ground and senescing plants shall be counted as living plant material, i.e., as individual species with their own percent (%) cover. A note in the 'Additional Species Description' column listing the dead species and an approximate cover will ensure that the information is in SONRIS but not quantified.

5. *Tree, Shrub, Herbaceous, Carpet layer, definition and what it consists of:* All plants shall be identified to the species, whenever possible. For the purpose of CRMS, trees are defined as having a diameter at breast height (DBH) greater than or equal to 5 cm. If the DBH is less than 5 cm then it is classified as a shrub. Consequently, tree and shrub classification is not dependant upon its height. The carpet layer consists of species that hug the ground and are typically the first growth from the soil layer. Mueller-Dombois and Ellenberg (1974) describes a moss layer which DNR refers to as the carpet layer.

> ... of the species list is likely to complicate the analysis.
> No definite height limits can be set in advance for any community layer, because this depends on the community structure itself. Nevertheless, certain height limits that are commonly found convenient in forest communities are:
>
> 1. *T* = Tree layer, any plant taller than 5 m. In taller forests, this layer is usually subdivided into 2, 3, or even 4 layers of decreasing heights (*T*1, *T*2, etc.).
> 2. *S* = Shrub layer, plants between 50 cm and 5 m tall, or 30 cm and 5 m tall. A subdivision is commonly indicated at 2 or 3 m height. For example, an *S*1 layer may be indicated from 2 to 5 m, and an *S*2 layer from 30 (or 50) cm to 2 m height.
> 3. *H* = Herb layer, from < 30 cm (or 50 cm) to 1 m height. Subdivisions analogous to the *T* and *S* layers are often useful. For example, *H*1 as tall herb layer > 30 cm height, *H*2, as medium-tall herb layer from 10 to 30 cm height, *H*3 as low herb layer < 10 cm height.
> 4. *M* = Moss and lichen layer. This refers usually to a ground-appressed low carpet of less than 5 or 10 cm height. Where necessary it should be subdivided into an *M* layer on bare mineral soil, an *M* layer on humus, an *M* layer on decaying wood, an *M* layer on stones or exposed rocks. This leads over also to a recognition of one or several epiphyte layers (*E*), the plants that occur attached (but not parasitically) to other plants, for example, mosses on tree stumps or trunks.
>
> A compromise must often be made between emphasizing height stratification or life form. For example, a decision is required in certain stands with a distinct moss layer (*M*) whether to record small herbs and seedlings in the same layer (*M*) or to recognize a separate low vascular plant layer (*H*) of < 10 cm or so in height. This may initially cause some difficulties. But the problem can always be solved by a decision that, of course, should be closely adapted to the prevailing conditions.
> The species are recorded within these height strata or in life ...

6. *Visser classification on the field data sheets:* The Visser classification shall not be included on the field data sheet. The Visser classification is used to characterize the site and not the individual plot. Having multiple classifications for one site may cause added confusion.

7. *Documenting water depth:* Water depth shall be documented in the 'Ancillary Data' section of the data sheet relative to the marsh surface as well as including the staff gauge reading, if present. For example, water is 0.5 ft above the marsh surface or water is 0.5 ft below the marsh surface and the staff gauge reading is 1.75 ft.

8. *Plot re-establishment due to natural occurrences:* Plots shall not be re-established due to natural occurrences. Plots are only re-established if the plot can not be located because the PVC pole/metal bar is not found or the plot has converted to open water.

9. *Plot re-establishment due to conversion to open water:* Plots shall be re-established when the percentage of open water is greater than 45%. The purpose of the vegetation plots is to capture the vegetative community at the site. The purpose of the satellite imagery is to classify the percentage or ratio of land / water.

10. *Recording vegetation height procedure:* Document the height of 5 randomly chosen stems of the dominant species in the 'Ancillary Data' section. The averages of these 5 readings are documented in the top section of the field data sheet which is then entered into the database during data processing.

11. *Explain DBH (diameter at breast height) under different trunk growth circumstances:* Follow the illustrations presented in Avery and Burkhart (1994) reference in the SOP reference list.

12. *Plot photos:* Photos of each vegetation station shall be obtained with a digital camera having a date and time stamp. Documentation shall occur in the 'Ancillary Data' section of the data sheet. Photos shall be labeled using the station number and date.

Data Processing and Data Analysis

Prior to data analysis, the data shall be retrieved from the department's SONRIS database. As a result of data entry and using the Braun-Blanquet (B-B) method, the B-B rank column is automatically populated from the value entered into the % cover column in the database. The following table shows the association between the % cover used in the field to estimate the total plot cover, the cover of each individual layer (tree, shrub, herbaceous, carpet, and for each individual species used in the database.

Cover Range	Braun –Blanquet RankValue
Solitary(1)	R
<1(2)	+
1-5.99%	1
6-25.99%	2
26-50.99%	3
51-75.99%	4
79-100%	5

(1) Solitary is used to indicate the presence of only one plant of a particular species.
(2) <1 is used to indicate the cover is a fraction of 1%

When using the Percent Cover or B-B Rank Value for data analysis, the characters and symbols shall be converted to numerical values. DNR/CRD has adopted the numerical value of "0.25" to represent Solitary / R and the numerical value of "0.5" to represent <1 / +.

Updated field data sheet for Herbaceous Marsh Stations.

Herbaceous Marsh Vegetation Sampling Data Sheet

Modified Braun-Blanquet Technique

Sample Type: Stratified_____ Random_____ Transect_____ Vegetation Type: NATURAL _____ PLANTED _____

Project: _____ Station: _____ Group: _____

Personnel: _____ Plot Size (m^2): _____ Date: _____

Station Coordinates: _____ Organization: _____

Plant Community Type: _____Freshwater _____Intermediate _____Brackish _____Saline _____Cypress-Tupelo Swamp

_____Other (describe) _____

Percent Cover: Total Cover _____% Tree*_____% Shrub _____% Herbaceous _____% Carpet _____%

*(*Do not estimate % Tree cover when completing data sheet in swamp sites.)*

Average Height: Dominant Height _____(cm) Tree _____(cm) Shrub _____(cm) Herbaceous _____(cm) Carpet _____(cm)

Species List

Scientific Name	Common Name	% Cover	B-B Rank	IN / OUT	Number Planted	Number Alive	Additional Species Description

B-B Rank: (5) 76-100%, (4) 51-75%, (3) 26-50%, (2) 6-25%, (1) 1-5%, (+) <1%, (r) Solitary

Ancillary Data:

Photo(s) obtained: Yes No (circle one); camera stamp name:_____

Dominant height of stems: (1)_____cm; (2)_____cm; (3)_____cm; (4)_____cm; (5)_____cm

Water relative to marsh: _____ft above or below (circle one)

Notes:

Updated field data sheet for Forest Community Stations.

Forest Community Data Sheet

Sample Type: Stratified_____ Random_____ Transect_____ Densiometer Reading _____ Canopy Cover (%) _____

Project: _____ Station: _____ Group: _____

Personnel: _____ Plot Size (m^2): _____ Date: _____

Station Coordinates: _____ Organization: _____

Plant Community Type: _____Cypress-Tupelo Swamp _____Bottomland Hardwood Forest
_____Other (describe) _____

Species List with Diameter at Breast Height (DBH)

Tree Number	Scientific Name	Common Name	Diameter (cm)	Shifted DBH (Y/N)	Distance aboveground (cm)	Additional Species Description

Ancillary Data:
Photo(s) obtained: Yes No (circle one); camera stamp name:_____
Dominant height of stems: (1)_____cm; (2)_____cm; (3)_____cm; (4)_____cm; (5)_____cm
Water relative to marsh: _____ft above or below (circle one)

Notes:

ADDENDUM 5

MONITORING STATION AND COORDINATE FILE USAGE

Addendum 5: Monitoring Station and Coordinate File Usage

December 6, 2005

TO: Richard Raynie, Coastal Resources Scientist Senior

FROM: Todd Folse, Coastal Resources Scientist III

SUBJECT: ADDENDUM TO THE STANDARD OPERATING PROCEDURES MANUAL (AUGUST 5, 2005 VERSION): PROPER USAGE OF THE MONITORING STATION (MONSTAT.XLS) AND STATION COORDINATES (COORDSTEMPLATE.XLS) FILES

This addendum serves as a clarification document to the two Excel files that are required as a 'Site Construction Report' deliverable and as a deliverable when the status of established data collection stations change.

Monitoring Station (Monstat.xls) File

This file provides the department with a method of tracking and organizing monitoring station information. This helps DNR personnel to manage a project, and facilitates the process of providing biological monitoring data to the public. This file lists the data parameters that are collected at each station. A "Monstat.xls" file shall be completed for each CRMS-Wetlands site and for each CWPRRA project. The following outline provides a detailed description of each column in the worksheet and how it shall be completed. The outline corresponds to the columns contained in the worksheet.

A. **STATION_ID**: This column contains the station name- whether for a project specific (Task 3) station or a CRMS-Wetlands station. For example, TE28-01 is a project specific station_id for the TE-28 project, while CRMS9999-H01 is a continuous hydrographic station for CRMS-Wetlands. Use of the CRMS-Wetlands station naming convention (located at the end of this outline) shall be followed.
B. **CRMS_SITE_ID**: This column is only used for stations associated with the CRMS-Wetlands project. The site number shall follow the nomenclature of this example: "CRMS9999" - where "CRMS" is always used as the first four letters and the site name is the next four digits (with no space separating the letters from the digits).
C. **FEDERAL_ID**: Follow three rules for this column:
    a. For any CRMS station outside the boundary of a CWPRRA project, the cell shall remain empty.
    b. For any CRMS station inside the boundary of a CWPRRA project, the cell shall contain the Federal ID number of the project.
    c. For any station associated with a Federal project, the cell shall contain the Federal ID number.

    NOTE: The department has provided shape files and other electronic files that provide the necessary information to accurately complete this column.
D. **STATE_ID:** Follow three rules for this column:
    a. For any CRMS station outside the boundary of a CWPPRA or state project, the cell shall remain empty.

b. For any CRMS station inside the boundary of a CWPPRA or state project, the cell shall contain the State ID number of that project. NOTE: It is possible for projects to be "state only" projects, which have no federal association; in such cases, the FEDERAL_ID cell shall remain empty.

NOTE: The department has provided shape files and other electronic files that provide the necessary information to accurately complete this column.

E. BASIN: Select from the pull down menu the appropriate basin in which the station is located.

F. FIELD OFFICE: Select from the pull down menu the field office which is responsible for the station.

G. PROJECT TYPE: For stations associated with the CRMS-Wetlands project, select "CWPPRA" from the pull down menu. For any other station, it depends on the agency or affiliation with which the data are associated. Consult a DNR representative.

H. STATUS: For stations being provided for the CRMS-Wetlands' "Site Construction Report" deliverable, all stations shall have a status of "ACTIVE." For those stations that were once active, i.e., data was previously collected, the station status may change depending on the project status or station conditions. When the status of a station changes, this column shall be updated, and the updated file shall be provided to DNR. This applies both to CRMS-Wetlands and Task 3 data collection stations.

I. DATA TYPE: This column is dependent on the data variable to be collected at the station. The appropriate data type shall be selected from the pull down menu.

J. MEASURE: This column is dependent on the data type (column I, above). Different data types have different types of measures. The appropriate measure shall be selected from the pull down menu.

K. FREQUENCY: Select from the pull down menu the frequency at which the data will be collected at the station.

L. METHOD: Select the method that was used to obtain the coordinates for the station. This should be "DGPS" for all stations, since this is the method required by the SOP.

CRMS-Wetlands Station Naming Convention

The following table lists the different types of stations associated with the CRMS-Wetlands project, followed by the correct use of station naming conventions as they would be applied for an example CRMS site number 9999.

Station Type	*Station ID*
Continuous hydrographic station	CRMS9999-**H**01
Continuous marsh mat station	CRMS9999-**M**01
Soil Porewater / Discrete hydrographic station	CRMS9999-**P**01
Herbaceous marsh vegetation station	CRMS9999-**V**01
Forested swamp vegetation station	CRMS9999-**F**01
Surface elevation station	CRMS9999-**E**01
Accretion station	CRMS9999-**A**01
Soil properties Station	CRMS9999-**S**01

NOTE: Bold type face is only used for emphasis of the letter in the Station ID column with its associated Station Type. Do not bold in station id column of any spreadsheet.

Station Coordinates (CoordsTemplate.xls) File

Whenever a Monitoring Station file is updated and delivered, a Station Coordinates file shall also be delivered. This file contains only three columns: "STATION_ID", which contains the station identification number (which is exactly like the one in the Monitoring Station file) and the easting & northing coordinates of the station in the coordinate system of UTM, NAD83 Meters. As stated in the SOP, these coordinates shall be collected using a DGPS unit.

March 13, 2007

TO: Ed Haywood, Coastal Resources Scientist Manager

FROM: Todd Folse, Coastal Resources Scientist Supervisor

SUBJECT: ADDENDUM TO THE STANDARD OPERATING PROCEDURES MANUAL (AUGUST 5, 2005 VERSION): MONTHLY DISCRETE SAMPLING OF SOIL POREWATER USING THE SIPPER PROBE METHOD

This addendum changes the method of collecting monthly discrete soil porewater readings along the boardwalk for each CRMS-Wetlands site from the soil porewater well method to the sipper probe method. Data collected during the previous year using both methods as well as input from contracted field personnel has enabled the department to alter the method of data collection. The SOP explains the sipper probe method as it relates to data collection in the vegetation plots. This addendum will serve as the procedure for monthly discrete sampling.

Sipper Probe and Porewater Extractor Materials List

1. Rigid Sipper Probes
    a. Rigid plastic or stainless steel tubing with a diameter of 3.0 mm (0.12 in.) with a maximum length of 95 cm (37.4 in.)
    b. Epoxy or sealant
    c. Drill and bit (1/32")
2. 60 ml syringe with Luer-lok tip
3. 50 ml plastic centrifuge tube (or similar tube) with an inside diameter of at least 2.54 cm (1.0 in.)
4. Hand-held discrete salinity meter (YSI 30 or equivalent)
5. Tygon Tubing: 30-90 cm (1.0 – 3.0 ft.) length of thick walled tygon tubing (3/16 inch insided diameter and 5/16 inch outside diameter) attached to the open end of the rigid sipper probe
6. Three-way valve
7. Cheesecloth (if necessary)

Construction of Sipper Probe and Porewater Extractor:

Information on page 106 of the SOP remains current.

Data Collection

Soil Porewater Salinity via the Sipper Probe

1. Data collection will remain in the first 10 foot section of the base boardwalk. Porewater salinity will be collected at three stations at each CRMS site. Each

station will be spaced approximately 36 inches apart. Porewater extraction can occur on either side of the base boardwalk as long as the marsh well or other sampling locations are not disturbed. A station consists of a 10 cm depth and a 30 cm depth separated by approximately 2 inches.

2. Prior to insertion for each replication,
   a. Inspect the sipper holes for blockage and unclog as necessary.
   b. Verify the plunger is completely in the barrel of the syringe.
   c. Verify the 3-way valve is closed (off position) to the open atmosphere (i.e., liquid will flow up the tube to the syringe when the plunger is pulled).
3. From the boardwalk, insert the porewater sipper probe into the soil up to the 10 cm graduation mark. NOTE: The sipper should be inserted perpendicular to the soil surface and without creating a pocket around the probe for surface water to drain down and be inadvertently sampled.
4. Pull the plunger such that the stopper is at the top of the barrel.
5. Rotate the handle of the 3-way valve such that the tubing section of the probe is closed (a vacuum remains) and the valve to the atmosphere is open.
6. Push the barrel into the plunger to release the air from the barrel.
7. Rotate the handle of the 3-way valve back to its original position.
8. Repeat steps 4-7.

   NOTE: Water should begin to appear in the tubing section or even the syringe. If no water appears after the second time, then steps 4-7 shall be repeated a third time.
9. Before measuring porewater salinity, the tubing, syringe, and centrifuge tube must be rinsed with porewater from each sampling depth at least once. Fill about one-third to one-half the volume (~20-30 ml) of the syringe with porewater and rinse the interior of the syringe and the centrifuge tube thoroughly. Discard the water. Extract another 30 ml of porewater and use it to rinse the centrifuge tube (it is recommended to use a 3-way valve to dispense water from the syringe into the centrifuge tube to prevent losing suction on the sipper or the sipper hose).
   a. In some cases, there may not be enough water in the marsh soil for rinsing. Instead, distilled water may be used.
10. Dispose of the rinse and pull a third aliquot of porewater—enough to fill the centrifuge tube and cover the probe when it is in the centrifuge tube (~30-45 ml). In highly organic wetland soils porewater extraction may be blocked or severely inhibited by organic or small clay particles. If this condition occurs, securely fasten a piece of cheese cloth around the intake holes of the porewater sipper(s) to filter obstructing particles and extract another sample.
11. Dispense the sample into the centrifuge tube using the 3-way valve, insert the salinity probe, and record the date (MM/DD/YYYY), time (CST), depth (cm), temperature (˚C), specific conductance (µS/cm), and salinity (ppt) on the soil porewater field data sheet (Appendix A, Form 9) for each porewater sample. Try to keep the probe from touching the side of the centrifuge tube.
12. Carefully remove the sipper probe.

13. Move ~5 cm (~2 in) toward the terminal end of the boardwalk and re-insert the sipper probe into the soil matrix to the 30 cm depth.
14. Repeat steps 2-11.

The process above only completes the data collection for one (1) porewater station. This process must be completed two (2) more times in order to obtain the readings for all three stations.

During sample collection, if there is no water obtained after the third pull of the plunger, the station number, date, and time shall be documented. At no time shall a zero (0) be placed in any data cell when there is no water collected for a reading. During data entry, the water temperature, specific conductance, and salinity cells shall be left blank.

Lastly, in all cases, the surface water around the stations shall be documented in the notes section. For example, water was approximately 6 inches below the marsh surface or the water was approximately 2 inches above the marsh surface. This information is necessary for quality assurance as well as information that could be used when analyzing the data.

Data Processing

Information on page 109 – 111 of the SOP remains current.